HOLIP®

Member of the Danfoss Group

丹佛斯成员企业

Member of the Danfoss Group

HOLIP PRODUCT CATALOG

ZHEJIANG HOLIP ELECTRONIC TECHNOLOGY CO., LTD.

Introduction

Zhejiang Holip Electronic Technology Co. Ltd. is a member of the Danfoss Group and a centre for R&D, production and logistics as a part of Danfoss Power Electronic Unit.

Danfoss was established in 1933 and is the largest multinational industrial manufacturing company in Denmark. As a global leader in refrigeration & air conditioning, heating & water processing and power electronics, Danfoss sets the industry standard for reliability, excellence and innovation, always striving for the best in customer satisfaction and solutions within the climate and energy industry.

Founded in 2001, Holip engages in researching, designing, producing, marketing and servicing of frequency converters and is a true phenomenon in the industry. It has became one of the largest frequency converter manufacturers in China.

Holip's core product is the HLP series frequency converter, which has been widely used in various industries such as chemical fibres, textiles, printing and dyeing, plastics, knitwear, lighting, steel, paper, chemicals, machines and cranes. It is found widely throughout European, American, Asian, and African markets. Holip is dedicated to providing high quality products, professional sales and efficient and reliable service. Every converter is put through strict quality controls, such as high temperature tests and full load tests, before delivery.

Turnover increased to 60 million USD in 2009 and total output reached 320,000 units. In June 2009, Holip moved into a new modernized factory featuring high-tech production equipment and advanced production processes. The new factory covers an area of 30,000 square meters with a floor area of 21,000 square meters, allowing Holip to increase its capacity to 1 million units per year.

Holip's mission is to exceed market speed in its growth to become a well-known, high-quality brand name, fulfilling its role as the second global brand within the Danfoss Group.

HOLIP
Member of the Danfoss Group
丹佛斯成员企业

Product Catalog

HLP-A	**Series Versatile Frequency Converter**	1
HLP-C^{+}	**Series Mini Frequency Converter**	8
HLP-V	**Series Vector Frequency Converter**	12
HLP-SV	**Series Vector Frequency Converter**	19
HLP-NV	**Series Vector Frequency Converter**	24
HLP-P	**Series Fan/Pump Dedicated Frequency Converter**	29
HLP-F	**Series Textile Dedicated Frequency Converter**	35
HLP-M	**Series Machine Tool Dedicated Frequency Converter**	39
HLP-J	**Series Injection Machine Dedicated Frequency Converter**	43
HLP-H	**Series Medium Frequency Converter**	47
HLP-CP	**Series Treadmill and Knitter Dedicated Frequency Converter**	51

HLP-A Series Versatile Frequency Converter

HLP-A series frequency converter, a general purpose converter, has powerful and various functions, such as PID controller, simple PLC, internal /external control multi-speed, wobble which is widely used in textile and chemical fiber industries, quasi winding and unwinding function which can keep the line speed constant in a definite accuracy, etc. It has good overload capacity and high output torque.

HLP-A series frequency converters have been widely used in knitwear, chemical fiber, printing and dyeing, plastics, mechanical, chemical, steel, paper and light industries. It has gained high prize from customers, for its high quality and stability.

Power range: 0.4-90 kW (1 & 3×220V), 0.75-415 kW (3×380V)

Functions and Features

- It has high reliability with the motor control IC+IGBT at the core;
- It has a wider tolerance for the changes of supply voltage by ±15%;
- It has PID controller which is used in close loop control systems;
- It has simple PLC which can achieve multi-speed, quasi winding and unwinding function, wobble, etc;
- It has high startup torque which can reach 150% while 1Hz;
- It has good overload capacity which can reach 150% for 1min, and 180% for 0.2 sec;
- Its output frequency resolution can reach 0.01Hz;
- It has three user-defined frequency bypasses and a range;
- It can automatic compensate output torque when output frequency is low;
- It can automatic regulate output voltage when supply voltage changes in a range;
- It has automatic energy-saving function which can automatic calculation the optimal output voltage according to the load to save energy;
- It has Holip communication protocol and Modbus protocol, and it is easier for user to build up centralized control system.

Technical Data

Modulation		SPWM
AC line supply		380V: 380 ± 15%; 220V: 220 ± 15%
5 Digital Display & Status Indicator Lamp		Displaying frequency, current, revolution, voltage, counter, temperature, forward or reverse, fault, etc.
Communication Mode		RS 485 serial communication
Communication Protocol		Holip Communication Protocol Modbus Protocol
Surroundings		Temperature: -10 ~ 40℃ Humidity: 0-95% Relative Humidity (Non-dewfall) Vibration: Below 0.5g
Frequency Control	Frequency Range	0.10~400.00Hz
	Accuracy	Digital: 0.01% (-10~40℃) Analog: 0.1% (25±10℃)
	Reference Resolution	Digital: 0.01Hz Analog: 1‰ of Maximum Output Frequency
	Output Frequency Resolution	0.01Hz
	Frequency Setting by LCP	By the buttons of ← ∧ ∨
	Frequency Setting by Analog	External 0-5V, 0-10V, 4-20mA, 0-20mA
	Other functions	Frequency low limit, Start Frequency, Stop Frequency, Frequency bypass function (Three settable frequency bypasses).
General Control	Ramp time	0.1- 6500sec (There are four selectable ramp up / down time)
	V/F Curve	It is possible to make a V/F curve on the basis of three definable voltage and frequencie.
	Torque Characteristic	Maximum torque compensation can reach 10%. Startup torque can reach 150% while 1Hz.
	Programmable Digital Input	Six programmable digital inputs for 8-speed control, Simple PLC, Ramp time selecting, Up and Down function, Counter, Emergency stop, etc.
	Programmable Digital Output	Five programmable digital outputs for indicating the status of running, below start frequency, counter, fault, the status of simple PLC and alarm.
	Other functions	Automatic Voltage Regulation, Ramp to stop or Coast, DC brake, Automatic reset and restart, Flying start, Simple PLC, Wobble, quasi Winding and Unwinding function, Automatic energy-saving function, User-definable Carrier frequency (0.7-20kHz), etc.
Protections	Overload Protection	Electronic relay protection for motor Frequency converter (Constant torque: 150%/1 min)
	Fuse Protection	If fuse has blown, motor will stop.
	Over voltage Protection	220V Class: DC Voltage ＞ 400V 380V Class: DC Voltage ＞ 800V
	Under voltage Protection	220V Class: DC Voltage ＜ 200V 380V Class: DC Voltage ＜ 400V
	Flying start after transient supply loss	Flying start after transient supply loss
	Anti-stall Function	Prevent stalling when running, accelerating and decelerating
	Output short circuit Protection	Electric circuit protection
	Other functions	Heat sink over-temperature protection, Restriction against reverse, Fault Reset, Parameter lock, One for two, etc.

Wiring Diagram and Terminal Description

The wiring of the converter is divided into two parts: main circuit and control circuit. The following drawing is the factory standard wiring diagram of HLPA00D423C-HLPA03D723B / HLPA0D7543C-HLPA03D743B. The terminals should be connected correctly as the wiring diagram (See the user manual for details).

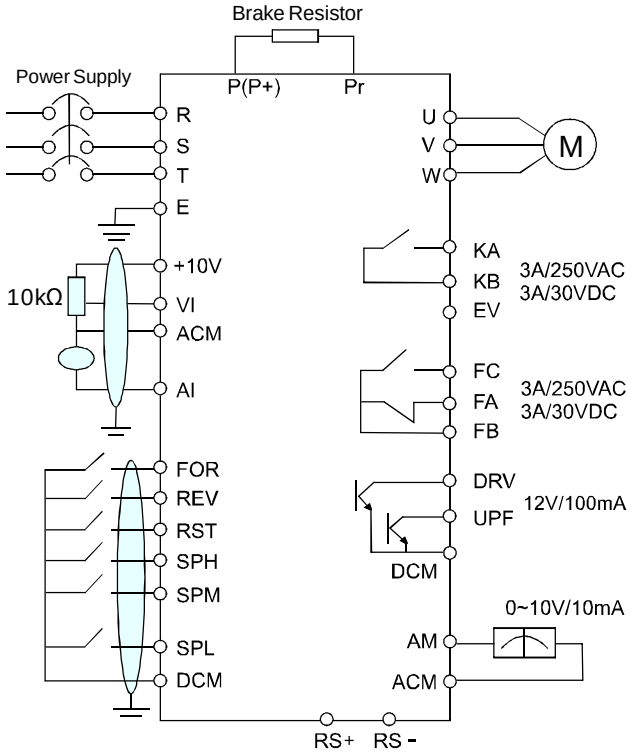

Symbol	Description
R, S, T	Power supply terminals (For single-phase, connect wires to any two terminals)
U, V, W	Output terminals
P, Pr	Braking Resistor terminals
E	Ground terminal
DCM	Common terminal for digital inputs
+10V	10V DC supply
VI	Voltage input terminal
AI	Current input terminal
AM	Programmable Pulse /Analog Output
ACM	Common terminal for analog inputs
RS+, RS-	RS 485 Serial Communication Terminals

Symbol	Description	Factory setting
FOR	Programmable Digital Input	Forward
REV	Programmable Digital Input	Reverse
RST	Programmable Digital Input	Reset
SPH	Programmable Digital Input	High speed
SPM	Programmable Digital Input	Medium speed
SPL	Programmable Digital Input	Low speed
DRV	Programmable Digital output (Optical coupling)	Running
UPF	Programmable Digital output (Optical coupling)	Reach Reference
FA, FB	Programmable Digital output (Normal close)	Fault
FB, FC	Programmable Digital output (Normal open)	Fault
KA, KB	Programmable Digital output (Normal open)	No Function

Electrical Data

Ordering number	Model	Mains supply	Power (kW)	Output Current (A)	Motor (kW)	LCP Model
301001	HLPA00D423C	1 & 3×220V 50Hz	0.4	2.5	0.4	OP-AC01
301002	HLPA0D7523C	1 & 3×220V 50Hz	0.75	5.0	0.75	
301003	HLPA01D523C	1 & 3×220V 50Hz	1.5	7.0	1.5	
300004	HLPA02D223B	1 & 3×220V 50Hz	2.2	11	2.2	OP-AB01
300005	HLPA03D723B	1 & 3×220V 50Hz	3.7	17	3.7	
300006	HLPA05D523B	1 & 3×220V 50Hz	5.5	25	5.5	OP-AB02
300007	HLPA07D523B	1 & 3×220V 50Hz	7.5	33	7.5	
300008	HLPA001123B	1 & 3×220V 50Hz	11	49	11	
300009	HLPA001523B	1 & 3×220V 50Hz	15	65	15	
300010	HLPA18D523B	1 & 3×220V 50Hz	18.5	80	18.5	
300011	HLPA002223B	1 & 3×220V 50Hz	22	96	22	
300012	HLPA003023B	1 & 3×220V 50Hz	30	130	30	
300013	HLPA003723B	1 & 3×220V 50Hz	37	160	37	
300014	HLPA004523B	1 & 3×220V 50Hz	45	182	45	
300015	HLPA005523B	1 & 3×220V 50Hz	55	210	55	
300016	HLPA007523B	1 & 3×220V 50Hz	75	286	75	
300017	HLPA009023B	1 & 3×220V 50Hz	90	343	90	
301101	HLPA0D7543C	3×380V 50Hz	0.75	2.7	0.75	OP-AC01
301102	HLPA01D543C	3×380V 50Hz	1.5	4.0	1.5	
301103	HLPA02D243C	3×380V 50Hz	2.2	5.0	2.2	
300104	HLPA03D743B	3×380V 50Hz	3.7	8.5	3.7	OP-AB01
300105	HLPA05D543B	3×380V 50Hz	5.5	12.5	5.5	OP-AB02
300106	HLPA07D543B	3×380V 50Hz	7.5	17.5	7.5	
300107	HLPA001143B	3×380V 50Hz	11	24	11	
300108	HLPA001543B	3×380V 50Hz	15	33	15	
300109	HLPA18D543B	3×380V 50Hz	18.5	40	18.5	
300110	HLPA002243B	3×380V 50Hz	22	47	22	
300111	HLPA003043B	3×380V 50Hz	30	65	30	
300112	HLPA003743B	3×380V 50Hz	37	80	37	
300113	HLPA004543B	3×380V 50Hz	45	91	45	
300114	HLPA005543B	3×380V 50Hz	55	110	55	
300115	HLPA007543B	3×380V 50Hz	75	152	75	
300116	HLPA009043B	3×380V 50Hz	90	176	90	
300117	HLPA011043B	3×380V 50Hz	110	210	110	
300118	HLPA013243B	3×380V 50Hz	132	253	132	
300119	HLPA016043B	3×380V 50Hz	160	304	160	
300122	HLPA018543B	3×380V 50Hz	185	340	185	
300123	HLPA020043B	3×380V 50Hz	200	380	200	
300124	HLPA022043B	3×380V 50Hz	220	426	220	
300121	HLPA025043B	3×380V 50Hz	250	480	250	
300127	HLPA028043B	3×380V 50Hz	280	540	280	
300125	HLPA030043B	3×380V 50Hz	300	580	300	
300126	HLPA031543B	3×380V 50Hz	315	605	315	
300129	HLPA034543B	3×380V 50Hz	345	660	345	
300130	HLPA037543B	3×380V 50Hz	375	715	375	
300131	HLPA040043B	3×380V 50Hz	400	765	400	
300132	HLPA041543B	3×380V 50Hz	415	795	415	

Note: If 500-660kW converters are in demand, please make clear when ordering.

Note: When ordering, please confirm ordering number, model and specifications carefully.

Mechanical dimensions

Model	A	B	C	D	E	F	G	H	Mechanical dimensions (Unit: mm)
HLPA00D423C HLPA0D7523C HLPA01D523C HLPA0D7543C HLPA01D543C HLPA02D243C	116	125	161	170	141	Φ5			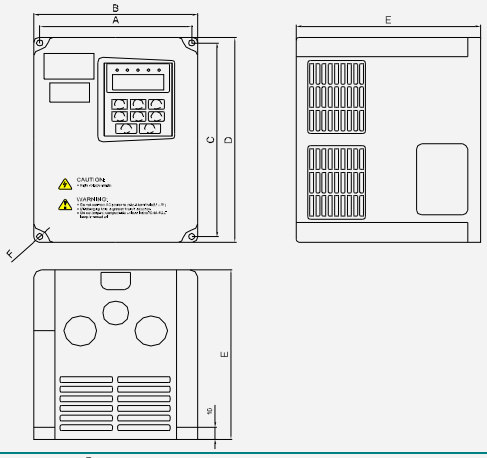
HLPA02D223B HLPA03D723B HLPA03D743B	128	140	238	250	157	Φ5			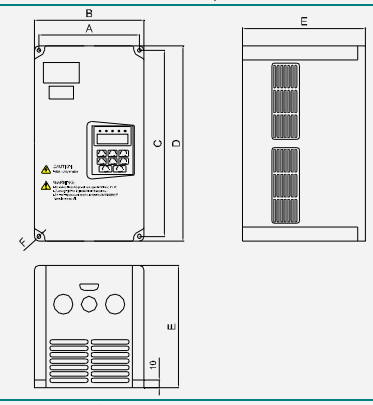
HLPA05D523B HLPA07D523B	130	208	325	340	199	Φ7			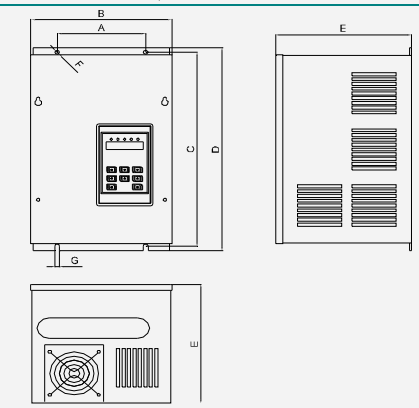
HLPA05D543B HLPA07D543B	184	200	306	318	180	Φ6	6		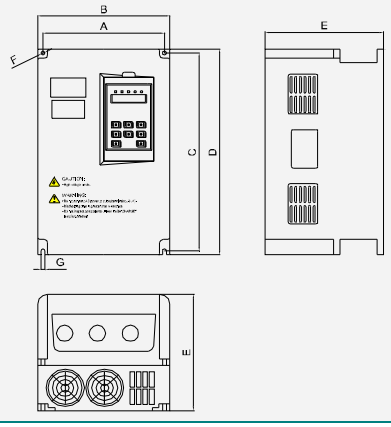

Mechanical dimensions

Model	A	B	C	D	E	F	G	H	Mechanical dimensions (Unit: mm)
HLPA001123B HLPA001143B HLPA001543B HLPA001523B	182	257	437	457	242	Φ8	8		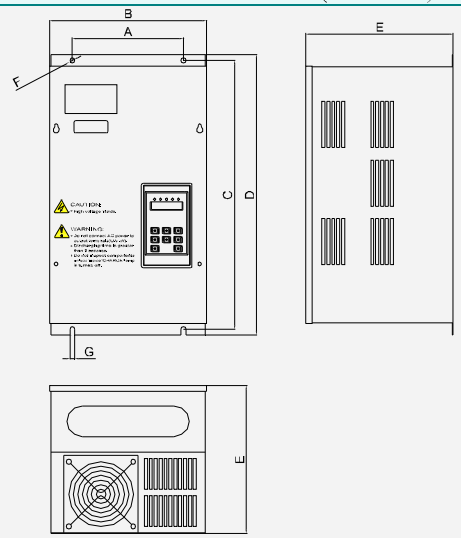
HLPA18D523B HLPA18D543B HLPA002243B HLPA002223B	206	281	490	510	242	Φ8	8		
HLPA003043B	239	315	490	510	242	Φ8	8		
HLPA003023B HLPA003743B HLPA004543B HLPA005543B	250	345	650	670	325	Φ10	10		
HLPA003723B	300	450	768	800	350	Φ16	16		
HLPA004523B	300	450	828	860	350	Φ16	16		
HLPA005523B	500	650	868	900	400	Φ16	16		
HLPA007543B	300	450	768	800	350	Φ16	16		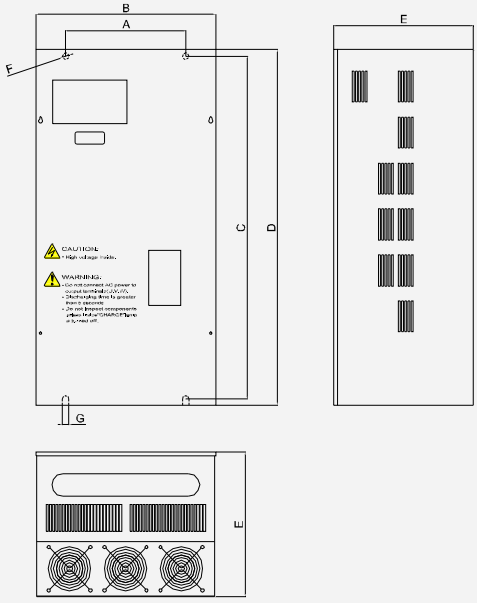
HLPA009043B	300	450	828	860	350	Φ16	16		
HLPA007523B HLPA009023B HLPA011043B HLPA013243B	500	650	868	900	400	Φ16	16		
HLPA016043B	560	650	868	900	400	Φ16	16		
HLPA013243BG ~ HLPA016043BG	600	600	1649	90	420	90	400	Φ16	There are four lifting rings on the top of the cabinet, their height is : 36mm for 110～250 kW, 43mm for 280～415 kW.
HLPA018543B HLPA020043B HLPA022043B HLPA025043B	600	600	1805	90	420	90	400	Φ16	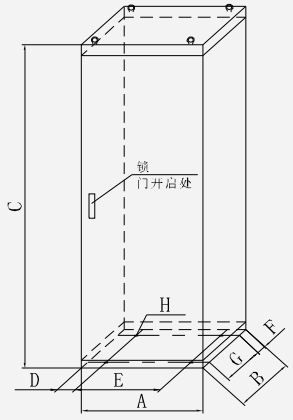
HLPA028043B HLPA030043B HLPA031543B	685	600	2225	90	505	90	400	Φ16	
HLPA034543B HLPA037543B HLPA040043B HLPA041543B	855	600	2279	90	675	90	400	Φ16	

Dimensions of LCP

Ordering number	LCP Model	Mechanical dimensions (Unit: mm)
335100	OP-AB01	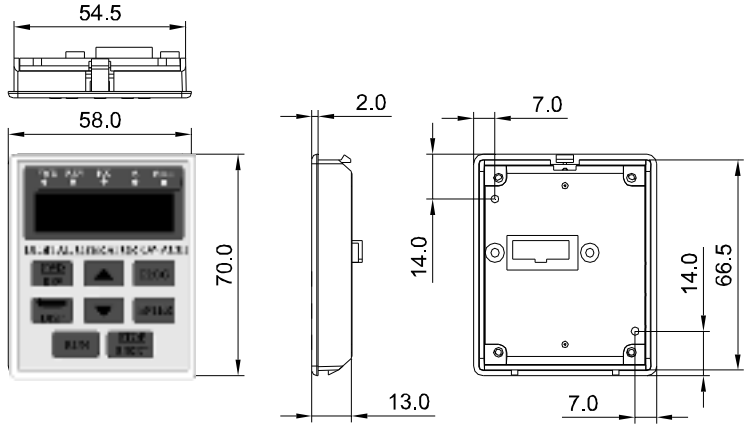
335110	OP-AC01	
335101	OP-AB02	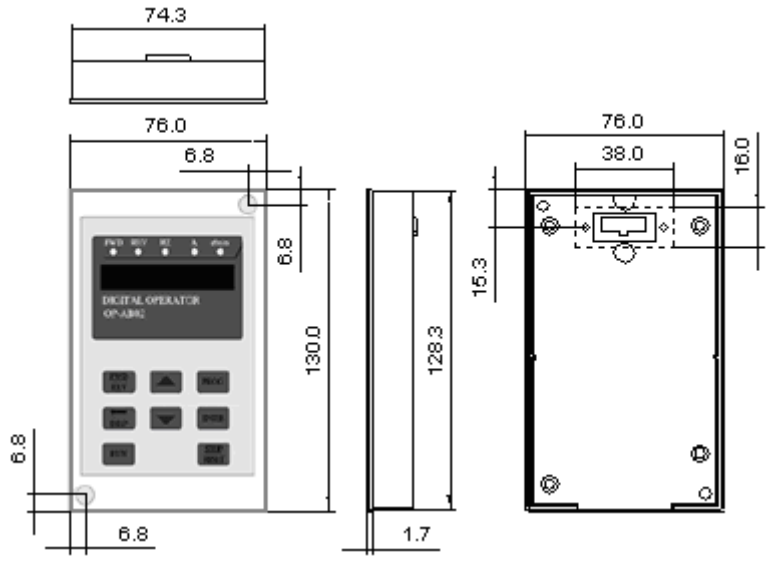

Note: The dimensions of OP-AB01 and OP-AC01 are the same, but the interfaces of them are different.

Note: The dimensions of OP-AB01 and OP-AB02 are different, but the interfaces of them are the same.

Options

A dedicated cable is available for remote communication between local control panel (LCP) and frequency converter. The interfaces of the cable are common for LCP of HLP-A, HLP-C^{+}, HLP-P, HLP-F, HLP-J, HLP-M, HLP-H and HLP-CP series converters. User can select suitable length according to the following form.

Ordering number	Length (m)	Ordering number	Length (m)	Ordering number	Length (m)
335130	1	335134	7	335138	32
335131	2	335135	12	335139	11
335132	3	335136	10	335146	20
335133	5	335137	8	335147	50

HLP-C+ Series Mini Frequency Converter

HLP-C+ series mini frequency converter, which is particularly designed for low-power motors, has smaller size and better performance. It has PID controller, simple PLC, wobble, multi-speed, automatic voltage regulation and energy-saving functions, etc. Its output frequency range is 0.10-600.00Hz.

HLP-C+ series mini frequency converter has been widely used in a variety of applications for its high output torque, good anti-interference capacity, low noise, useful functions.

Power range: 0.4-1. 5kW (1 & 3×220V), 0.75-2.2kW (3×380V)

Functions and Features

- It has high reliability with PIM at the core;
- It has a wider tolerance for the changes of supply voltage;
- It has high output torque which can reach 150% while 1Hz;
- Its ramp time can be 0.1s for high braking torque ;
- It has low noise for its user-definable carrier frequency which can be as high as 16kHz;
- It has PID controller and simple PLC function;
- It takes up less space for its smaller size;
- It has wobble function which is used in chemical fiber, printing and dyeing industries;
- It has quasi winding and unwinding function which can be used in the situation of keeping the line speed constant in a definite accuracy;
- It can lock parameters to avoid parameters modified by mistake;
- It has Holip Communication Protocol and Modbus Protocol, and it is easier for user to build up centralized control system.

Technical Data

Modulation		SPWM
AC line supply		400V: 345-440V; 230V: 170-230V
4 Digital Display & Status Indicator Lamp		Displaying frequency, current, revolution, voltage, counter, temperature, forward or reverse, fault, etc.
Communication Mode		RS 485 serial communication
Communication Protocol		Holip Communication Protocol Modbus Protocol
Surroundings		Ambient Temperature: -10 ~ 40℃ Humidity: 0- 95% Relative Humidity (Non-dewfall) Vibration: Below 0.5g
Frequency Control	Output Frequency Range	0.10 ~ 600.00Hz
	Accuracy	Digital: 0.01% (-10~40℃) Analog: 0.1%　(25±10℃)
	Reference Resolution	Digital: 0.1Hz Analog: 1‰ of Maximum Output Frequency
	Output Frequency Resolution	0.1Hz
	LCP Frequency Setting	By the buttons of ∧ ∨
	Analog Frequency Setting	External 0-5V, 0-10V, 4-20mA, 0-20mA
	Other functions	Frequency low limit, Start Frequency, Stop Frequency, Frequency bypass function (Three settable frequency bypasses), etc.
General Control	Ramp time	0.1-6500sec (There are four selectable ramp up / down time)
	V/F Curve	It is possible to make a V/F curve on the basis of three definable voltage and frequencie.
	Torque Characteristic	Maximum torque compensation can reach 10% Startup torque can reach 150% while 1Hz
	Programmable Digital Input	Six programmable digital inputs for 8-speed control, Simple PLC, ramp time switching, up and down function, counter, emergency stop, etc
	Programmable Digital Output	Two programmable digital outputs for the status of running, below start frequency, counter, fault, the status of simple PLC and alarm.
	Other functions	Automatic Voltage Regulation, Ramp to stop or Coast, DC brake, Automatic reset and restart, Flying start, Simple PLC, Wobble, quasi winding and unwinding function, Automatic energy-saving function, User-definable Carrier frequency (1.5-16kHz), etc.
Protections	Over voltage Protection	220V Class: DC Voltage ＞ 400V 380V Class: DC Voltage ＞ 800V
	Under voltage Protection	220V Class: DC Voltage ＜ 200V 380V Class: DC Voltage ＜ 400V
	Flying start after transient supply loss	Flying start after transient supply loss
	Anti-stall Function	Prevent stalling when running, accelerating and decelerating
	Output short circuit Protection	Electric circuit protection
	Other functions	Heat sink over-temperature protection, Restriction against reverse, Fault Reset, Parameter lock, etc.

Wiring Diagram and Terminal Description

The wiring of the converter is divided into two parts: main circuit and control circuit. The following drawing is the factory standard wiring diagram of HLP-C^{+} series converter. The terminals should be connected correctly as the wiring diagram. (See the user manual for details).

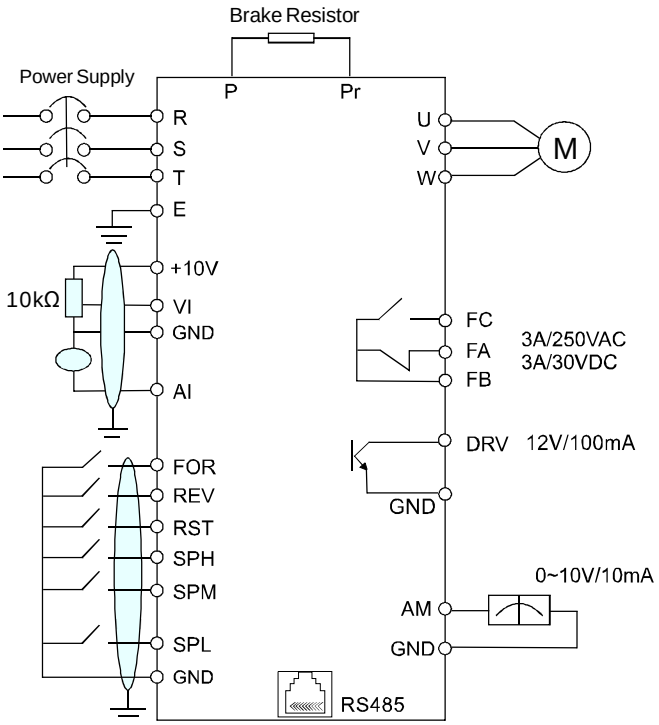

RS485 Communication Interface:

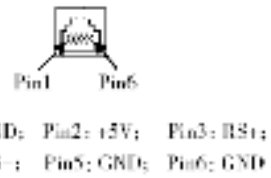

Symbol	Description	
R, S, T	Power supply terminals (For single-phase, connect wires to any two terminals)	
U, V, W	Output terminals	
P, Pr	Braking Resistor terminals	
E	Ground terminal	
AI	Current input terminal	
AM	Programmable Pulse/Current Analog Output	
+10V	10V DC supply	
VI	Voltage input terminal	
DCM	Common terminal for digital inputs	
GND	Common terminal for analog inputs	
Symbol	**Description**	**Factory Setting**
FOR	Programmable Digital Input	Forward
REV	Programmable Digital Input	Reverse
RST	Programmable Digital Input	Reset
SPH	Programmable Digital Input	High speed
SPM	Programmable Digital Input	Medium speed
SPL	Programmable Digital Input	Low speed
DRV	Programmable Digital Output (Optical coupling)	Running
FA, FB	Programmable Digital output (Normal close)	Fault
FB, FC	Programmable Digital output (Normal open)	Fault

Electrical Data

Ordering number	Model	Mains supply	Power (kW)	Output Current (A)	Motor (kW)
302200	HLPC+00D423B	1 & 3×220V 50/60Hz	0.4	2.5	0.4
302201	HLPC+0D7523B	1 & 3×220V 50/60Hz	0.75	5.0	0.75
302202	HLPC+01D523B	1 & 3×220V 50/60Hz	1.5	7.0	1.5
302203	HLPC+0D7543B	3×380V 50/60Hz	0.75	2.7	0.75
302204	HLPC+01D543B	3×380V 50/60Hz	1.5	4.0	1.5
302205	HLPC+02D243B	3×380V 50/60Hz	2.2	5.0	2.2

Note: When ordering, please confirm ordering number, model and specifications carefully.

Mechanical dimensions

Model	A	B	C	D	E	F	Mechanical dimensions (Unit: mm)
HLPC+00D423B	74	85	130	141.5	113	Φ5	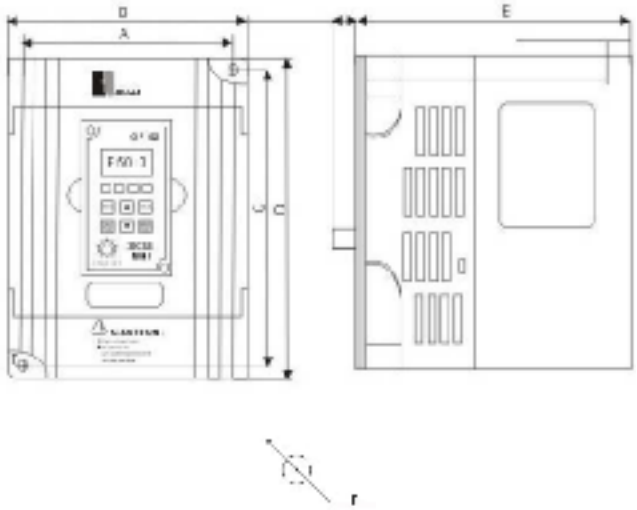
HLPC+0D7523B							
HLPC+01D523B							
HLPC+0D7543B	89	100	140	151	116.5	Φ5	
HLPC+01D543B							
HLPC+02D243B							

Dimensions of LCP

LCP Model	Mechanical dimensions (Unit: mm)
OP-CB04	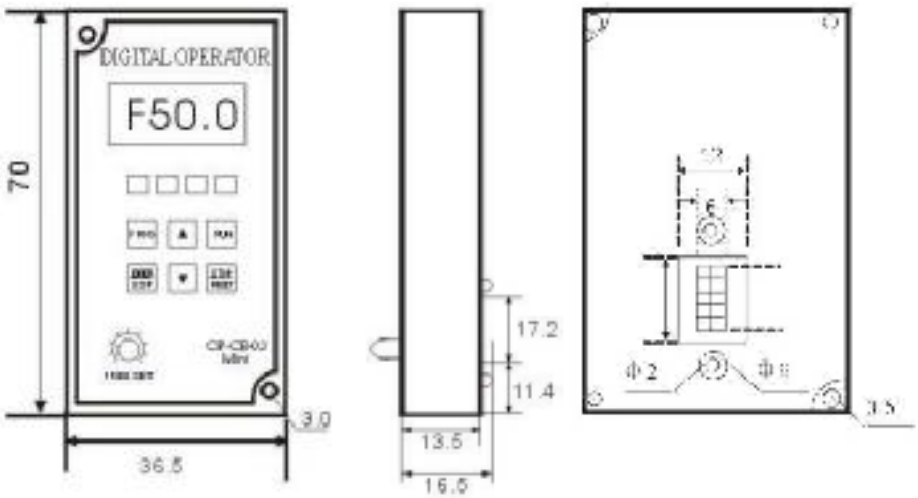

Note: The remote communication cable for LCP of HLP-C+ series refers to HLP-A part.

HLP-V/VS Series Vector Frequency Converter

HLP-V/VS series converter has unique VVC+ vector control system for torque and speed control of induction motors. It offers excellent dynamic behavior and stability both when the speed reference and the load torque have changed. Its overload capacity can reach 160%, and startup torque can be as high as 180%.

HLP-V/VS is user friendly, easy to operate and program. It has automatic motor adaptation function which ensures the optimum matching between converter and motors.

HLP-VS series converter is smaller than HLP-V series, taking up smaller space. But this series converter canít be installed brake unit and DC reactor inside.

Power range of HLP-V: 11-400kW (3×380V), 15-450kW (3×380V) for light load.

Power range of HLP-VS: 11-45kW (3×380V), 15-55kW (3×380V) for light load.

Functions and Features

- It has VVC+ vector control, speed control range can reach 1: 100 when open loop and 1: 1000 when closed loop, resolution is 0.003Hz;
- It has excellent torque characteristic, closed loop: 160% zero velocity holding torque (60s); 180% startup torque (0.5s);
- It has torque compensation function, and system response time is as short as 3ms;
- It has AMA (Automatic Motor Adaptation) function, which can exactly calculate motor internal parameters and keep motor in its best working condition;
- It has torque compensation function at high and low speed, which can ensure motor startup smoothly and run steady;
- It has slip compensation function, which can compensate the deviation between actual velocity and reference;
- It has good DC brake capacity, and is qualified to frequently DC brake;
- It has four menus, which can be switched by communication or digital terminals;
- It is easier to operate for user, the LCP of the converter can hot plug and copy parameters;
- It has torque control function, which can estimate output torque through motor current, speed and so on;
- It has flying start function, which can detect the velocity of motor quickly, and then drive motor to the reference;
- It has kinetic backup function , that is when power supply is cut off, the converter can still run and automatic decrease output frequency (this function is suited to mass load);
- The fan of heat-sink is controlled intelligently, having much longer service life;
- It has FC protocol, and it is easier for user to build up centralized control system.

Technical Data

AC line supply	Supply Frequency			48~62 Hz
	Supply Voltage			380-440V ±10%
Output Data	Output Voltage			0~100% supply voltage
	Output Frequency			0-1000 Hz (HLPV4015-HLPV4050) 0-450 Hz (HLPV4060-HLPV4250) 0-300 Hz (HLPV4350-HLPV4550)
	Resolution			± 0.003 Hz
	Overload capacity			110% / 160% Rated Current (60 sec)
Control Characteristics	Control site			LCP; Programmable Digital Inputs; Communication
	Reference source			LCP; Analog; Communication
	Speed Reference Resolution			Digital: 0.001Hz Analog: 1‰ of Maximum Output Frequency
	System response time			3ms
	Speed, control range			1: 1000 (closed-loop); 1: 100 (open-loop)
	Speed, Accuracy (open-loop)			<1500 rpm, Max. error: ± 7.5 rpm >1500 rpm, Max. error: ± 0.5% of actual speed
	Speed, Accuracy (closed-loop)			<1500 rpm, Max. error: ± 1.5 rpm >1500 rpm, Max. error: ± 0.1% of actual speed
	Torque control Accuracy (open-loop)			0- 150 rpm, Max. error: ± 20% of rated torque 150-1500rpm, Max. error: ± 10% of rated torque >1500rpm, Max. error: ± 20% of rated torque
	Torque control Accuracy (closed-loop)			Max. error: ±5% of nominal torque%
Control Terminals	Digital Input	No. of programmable digital inputs		8, Terminal No.: 16, 17, 18, 19, 27, 29, 32, 33
		Voltage Level		0-24V DC (PNP Positive Logic)
		Max. Input Voltage		28V DC
		Logic Voltage Level		"0"< 5V DC; "1"> 10V DC
		Input Resistance		2kΩ
		Scanning time per input		3ms
	Analog Input	Voltage	Number of Inputs	2, Terminal No.: 53, 54
			Voltage Level	0 ~ ±10V DC
			Input Resistance	10kΩ
		Current	Number of Input	1, Terminal No.: 60
			Current Range	0/4 ~ ±20 mA
			Input Resistance	200 Ω
		Resolution		10 bit + sign
		Input Accuracy		Max. error: 1% of full range
		Scanning time per input		3 ms
	Encoder/ Pulse Input	Number of Inputs		4, Terminal No.: 17, 19, 32, 33
		Input Frequency	Terminal No.:17	Max. Frequency: 5 kHz
			Terminal No.:29, 32, 33	Max. Frequency: 20 kHz (PNP open collector) Max. Frequency: 65 kHz (Push-Pull)
		Voltage Level		0-24V DC (PNP Positive Logic) Max. Input Voltage: 28V DC
		Logic Voltage Level		"0"< 5V DC; "1"> 10V DC
		Input Resistance		2 kΩ
		Scanning time per input		3 ms
		Resolution		10 bit + sign
		Accuracy	Terminal No.:17, 29, 33	Max. error: 0.5% of full range (100Hz-1kHz)
			Terminal No.:17, 29, 33	Max. error: 0.1% of full range (1-5kHz)
	Digital /Pulse Output	Number of Outputs		2, Terminal No.: 42, 45
		Voltage Level		0-24V DC
		Minimum load to ground		600 Ω (Terminal 39)
		Frequency Range		0-32 kHz
	Analog Output	Current Range and Accuracy		0/4 - 20 mA, Max. error: 1.5% of full range
		Maximum load to ground (Terminal 39)		500 Ω
		Resolution		8 bit

Technical Data

Control Terminals	24V DC Supply	Terminal No.		12, 13
		Max. Load		200 mA
		Ground terminal No.		20, 39
	Relay Output	Control card	Output Terminal	1, Terminal No.: 04-05 (Normal open)
			Maximum Load (AC)	50V AC, 1A, 50VA
			Maximum Load (DC)(IEC947)	25V DC, 2A；50V DC, 1A; 50W
		Power card	Output Terminal	2
			Terminal No.	01-03 (Normal close), 01-02 (Normal open)
			Maximum Load (AC)	250V AC, 2A, 500 VA
			Maximum Load (DC)(IEC947)	25V DC, 2A / 50V DC, 1A; 50W
			Minimum Load (DC)	24V DC, 10mA / 24V AC, 100mA
	RS485	Terminal No.		68 (TX+, RX+), 69 (TX-, RX-)
		Communication Protocol		FC Protocol
Surrounding	Ambient temperature			-10℃~40℃
	Humidity			0-95% Relative Humidity (Non-dewfall)
	Vibration			Below 0.5g
	Max. altitude above sea level			1000m
	Enclosure			IP20
Protections	Electronic motor thermal protection against overload			
	Overtemperature protection: Temperature monitoring of heat-sink ensures that the converter will cut off if the temperature reaches 90℃, and an overtemperature can only be reset when the temperature of the heat-sink has fallen below 60℃.			
	The converter is protected against short-circuiting and earth fault on output terminals U,V, W.			
	The monitoring of intermediate circuit voltage ensures that the converter will cut off if the intermediate circuit voltage gets too high or too low.			
	If a motor phase is missing, the converter will cut off.			
	If there is a main fault, the converter will carry out a controlled ramp-down.			
	If a main phase is missing, the converter will cut out when a load is placed on the motor.			

Wiring Diagram and Terminal Description

The wiring of the converter is divided into two parts: main circuit and control circuit. The following drawing is the factory standard wiring diagram of HLP-V/VS. The terminals should be connected correctly as the wiring diagram. (See user manual for details).

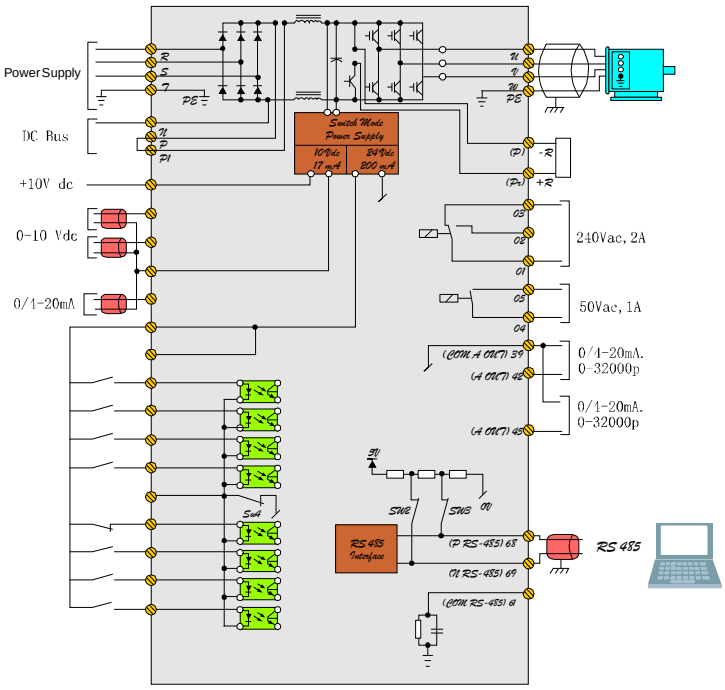

Electrical Data

Ordering number	Model	Mains supply	Power (kW)	Output Current (A)	Overload Current (A)(60s)	Motor (kW)
50007000	HLPV4015V10	3×380V 50/60Hz	11	24	38.4	11
50007001	HLPV4020V10	3×380V 50/60Hz	15	32	51.2	15
50007002	HLPV4025V10	3×380V 50/60Hz	18.5	37.5	60	18.5
50007003	HLPV4030V10	3×380V 50/60Hz	22	44	70.4	22
50007004	HLPV4040V10	3×380V 50/60Hz	30	61	97.6	30
50007005	HLPV4050V10	3×380V 50/60Hz	37	73	116.8	37
50007006	HLPV4060V10	3×380V 50/60Hz	45	90	135	45
50007007	HLPV4075V10	3×380V 50/60Hz	55	106	159	55
50007008	HLPV4100V10	3×380V 50/60Hz	75	147	221	75
50007009	HLPV4125V10	3×380V 50/60Hz	90	177	266	90
50007010	HLPV4150V10	3×380V 50/60Hz	110	212	318	110
50007011	HLPV4175V10	3×380V 50/60Hz	132	260	390	132
50007012	HLPV4215V10	3×380V 50/60Hz	160	315	473	160
50007013	HLPV4250V10	3×380V 50/60Hz	200	395	592.5	200
50007014	HLPV4350V10	3×380V 50/60Hz	250	480	720	250
50007015	HLPV4400V10	3×380V 50/60Hz	315	600	900	315
50007016	HLPV4475V10	3×380V 50/60Hz	355	658	987	355
50007017	HLPV4550V10	3×380V 50/60Hz	400	695	1042.5	400

Note: HLPV4015-4100V10 converters have braking unit and DC reactor built-in as optional, and HLPV4125-4550V10 converters has DC reactor inside as standard.

Note: User can order the converters with braking unit or DC reactor as required only among 11-75kW of converters.

Ordering number	Model	Mains supply	Power (kW)	Output Current (A)	Overload Current (A)(60s)	Motor (kW)
50007020	HLPVS4015V10	3×380V 50/60Hz	11	24	38.4	11
50007021	HLPVS4020V10	3×380V 50/60Hz	15	32	51.2	15
50007022	HLPVS4025V10	3×380V 50/60Hz	18.5	37.5	60	18.5
50007023	HLPVS4030V10	3×380V 50/60Hz	22	44	70.4	22
50007024	HLPVS4040V10	3×380V 50/60Hz	30	61	97.6	30
50007025	HLPVS4050V10	3×380V 50/60Hz	37	73	116.8	37
50007026	HLPVS4060V10	3×380V 50/60Hz	45	90	135	45

Note: HLP-VS converters can't be installed DC reactor and braking unit inside.

Note: When ordering, please confirm ordering number, model and specifications carefully.

Mechanical dimensions

Model	A	B	C	D	E	F	Mechanical dimensions (Unit: mm)
HLPV4015V10 HLPV4020V10	180	242	621	640	260	602.5	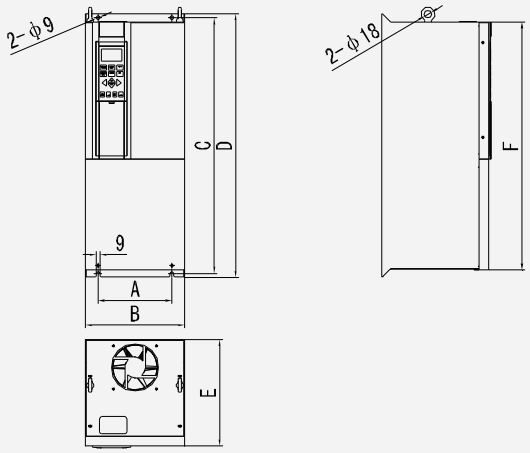
HLPV4025V10 HLPV4030V10	180	242	721	740	260	702	
HLPV4040V10 HLPV4050V10 HLPV4060V10	210	308	820	840	296	802	
HLPV4075V10 HLPV4100V10	250	370	820	840	335	802	
HLPV4125V10 HLPV4150V10	320	420	1163	1210	373	1162	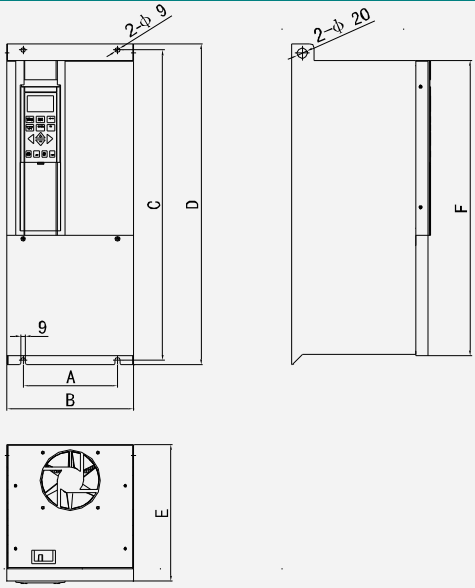
HLPV4175V10 HLPV4215V10 HLPV4250V10	303	405	1283	1340	370	1282	
HLPV4350V10 HLPV4400V10 HLPV4475V10 HLPV4550V10	303	585	1502	1557	490	1500	
HLPVS4015V10 HLPVS4020V10	180	242	471	490	260	440	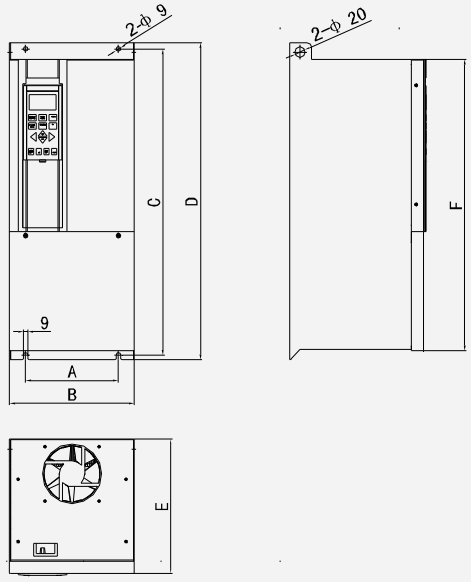
HLPVS4025V10 HLPVS4030V10	180	242	591	612	260	562	
HLPVS4040V10	210	308	618	640	295	590	
HLPVS4050V10 HLPVS4060V10	210	308	655	677	296	627	

Dimensions of LCP

Name	Mechanical dimensions (Unit: mm)
LCP	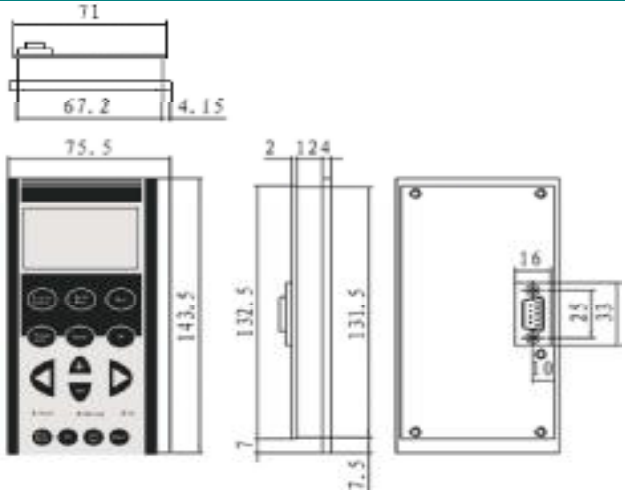

Accessories

A dedicated cable is available for remote communication between local control panel (LCP) and frequency converter. User can select length of the cable according to the following form.

Ordering number	Length	Ordering number	Length	Ordering number	Length
335020	1m	335021	2m	335022	5m

Note: Ordering number of remote mounting kit is 50008002, which is for mounting LCP into the cabinet door.

HLP-SV Series Vector Frequency Converter

HLP-SV series converter has unique VVC+ vector control system for torque and speed control of induction motors. It is specially developed for low-power motors and designed book-size, dust-proof, good cooling capacity. The converter can be installed side by side and really save space.

With built-in DC braking function, HLP-SV can transform kinetic energy in the application into braking power to slow down the motor. A brake chopper is built in the converters from 1.5kW upwards, which can save user's cost. It has PI controller, automatic motor turning function and smart logic controller (order on demand).

Power range: 0.18~2.2kW (1×200-240V), 0.25~3.7kW (3×200-240V), 0.4~22kW (3×380-480V)

Functions and Features

- It has two menus, which can be switched by communication or digital terminals;
- It has excellent torque characteristic, and response time of torque compensation is as short as 3ms;
- The LCP of converter can hot plug and copy parameters, it is easier to operate for user;
- It has SLC (Smart Logic controller) (order on demand), and it is easy for user to program;
- It has AMT (Automatic Motor Turning) function, which can calculate motor internal parameters and keep motor in its best working condition;
- It has slip compensation function, which can compensate the deviation between actual velocity and reference;
- It has torque compensation function at high and low speed, which can ensure motor startup smoothly and run steady;
- It has good DC brake capacity, and is qualified to frequently DC brake;
- It has flying start function, which can catch the velocity of motor quickly and drive motor to the reference;
- It can be started up by a pulse;
- It has FC protocol and Modbus protocol, and it is easier for user to build up centralized control system.

Technical Data

Supply Power	Supply Frequency				48~62 Hz
	Supply Voltage				3×380-480V±10%; 1 & 3×200-240V ±10%
Output Data	Output Voltage				0~100% of Supply Voltage
	Output Frequency				0~200 Hz (**VVC**$^+$), 0~400 Hz (V/F)
	Overload capacity				150% Rated Current
	Ramp time				0.05～3600s
Control Characteristics	Control site				LCP; Programmable Digital Inputs; Communication
	Reference source				LCP; Analog; Communication
Control Terminals	Programmable Digital Input	Number of Inputs			5, Terminal No.: 12, 18, 19, 27, 29
		Voltage Level			0-24V DC (PNP or NPN) Max. Input Voltage: 28V DC
		Logic Voltage Level			PNP: "0"< 5V DC; "1" >10V DC NPN: "0" >19V DC; "1" < 14V DC
		Input Resistance			4 kΩ
	Analog Input	Voltage	Number of Input		1, Terminal No.: 53
			Voltage Level		0~10V DC, Max. Input Voltage 20 V
			Input Resistance		10 kΩ
		Current	Number of Inputs		2, Terminal No.: 53, 60
			Current Range		0~20 mA, Maximum input current: 30 mA
			Input Resistance		200 Ω
	Analog Output	Number of Output			1, Terminal No. 42
		Output Current Range			0/4-20 mA
		Max. Load			500 Ω
		Output Accuracy			0.5% of full range
		Resolution			8 bit
	24V DC Supply	Terminal No.			12
		Max. Load			200 mA
	RS485 Communication	Terminal No.			68 (TX+, RX+), 69 (TX-, RX-), 61 (com)
		Communication Protocol			FC Protocol, Modbus Protocol
	Relay Output	Control card	Output Terminal		1, Terminal No.: 01-02 (Normal open), 01-03 (Normal close)
			Maximum Load	Resistive Load	250V AC 2A 30V DC 2A
				Inductive Load	250V AC 0.2A 24V DC 0.1A
	10V DC Supply	Terminal No.			50
		Output Voltage			10.5±0.5V
		Max. Load Current			25 mA
Surrounding	Enclosure				IP20
	Ambient temperature				-10℃~40℃, derating for high ambient temperature
	Humidity				5%-95% Relative Humidity (Non-dewfall)
	Vibration				Below 1.0g
	Max. altitude above sea level				1000m
					3000m (Derating for altitude over 1000m)
Protections	Electronic motor thermal protection against overload				
	Overtemperature protection: Temperature monitoring of heat-sink ensures that the converter will trip when the temperature reaches 95±5℃, and an overtemperature can only reset when the temperature of heat-sink has fallen below 70±5℃.				
	The converter is protected against short-circuiting on the output terminals U, V and W.				
	The converter is protected against earth fault on output terminals U, V, W.				
	The converter will trip if the intermediate circuit voltage gets too high or too low.				
	If a motor phase is missing, the converter will trip and issue an alarm.				
	If there is a main fault, the converter will carry out a controlled ramp-down and issue an alarm.				
	If a main phase is missing, the converter will trip and issue an alarm.				

Wiring Diagram and Terminal Description

The wiring of the converter is divided into two parts: main circuit and control circuit. The following drawing is the factory standard wiring diagram of HLP-SV. The terminals should be connected correctly as the wiring diagram. (See user manual for details).

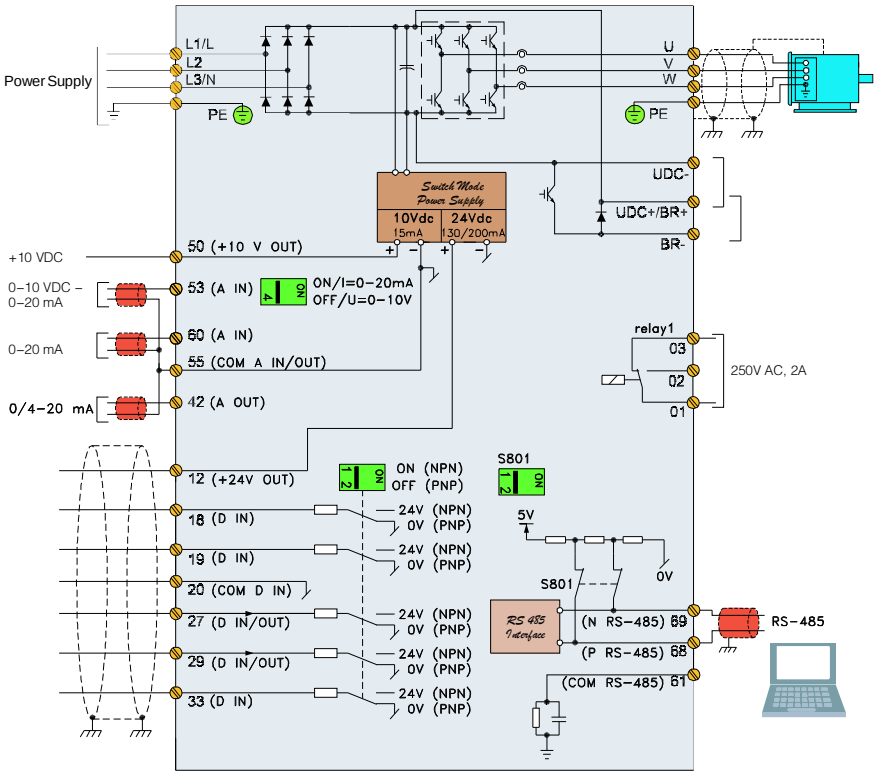

Symbol	Description	
L1 (L), L2, L3 (N)	Power supply terminals (Connect to L1 (L), L3 (N)for single phase)	
U, V, W	Output terminals	
UDC+, UDC-	DC bus terminals	
BR+, BR-	Braking Resistor terminals (1.5kW and above)	
PE	Ground terminal	
50	+10V DC Supply	
53	Analog Input (0-10V)	
60	Analog Input (0-20mA)	
55	Common terminal for analog inputs	
42	Analog Output (0/4-20mA)	
68, 69, 61	RS485 Communication Terminals	
12	24V DC Supply	
20	Common Terminal for Digital signal	
Symbol	**Description**	**Factory Setting**
01-03	Programmable Relay Outputs	No function
18	Programmable Digital Input	Startup
19	Programmable Digital Input	Reverse
27	Programmable Digital Input	No function
29	Programmable Digital Input	Jogging
33	Programmable Digital Input	No Function

Note: A brake chopper is built in the converter from 1.5kW upwards as standard.

Electrical Data

Ordering number	Model	Mains supply	Power (kW)	Output Current (A)	Motor (kW)
30002100	HLPSV0D1821A	1×200-240V 50/60Hz	0.18	1.2	0.18
30002101	HLPSV00D421A	1×200-240V 50/60Hz	0.4	2.5	0.4
30002102	HLPSV0D7521A	1×200-240V 50/60Hz	0.75	4.2	0.75
30002103	HLPSV01D521A	1×200-240V 50/60Hz	1.5	6.8	1.5
30002105	HLPSV02D221A	1×200-240V 50/60Hz	2.2	9.6	2.2
30002300	HLPSV0D2523A	3×200-240V 50/60Hz	0.25	1.5	0.25
30002301	HLPSV00D423A	3×200-240V 50/60Hz	0.4	2.5	0.4
30002302	HLPSV0D7523A	3×200-240V 50/60Hz	0.75	4.2	0.75
30002303	HLPSV01D523A	3×200-240V 50/60Hz	1.5	6.8	1.5
30002305	HLPSV02D223A	3×200-240V 50/60Hz	2.2	9.6	2.2
30002307	HLPSV03D723A	3×200-240V 50/60Hz	3.7	15.2	3.7
30004301	HLPSV00D443A	3×380-480V 50/60Hz	0.4	1.2	0.4
30004302	HLPSV0D7543A	3×380-480V 50/60Hz	0.75	2.2	0.75
30004303	HLPSV01D543A	3×380-480V 50/60Hz	1.5	3.7	1.5
30004304	HLPSV02D243A	3×380-480V 50/60Hz	2.2	5.3	2.2
30004306	HLPSV03D043A	3×380-480V 50/60Hz	3.0	7.2	3.0
30004308	HLPSV04D043A	3×380-480V 50/60Hz	4.0	9.0	4.0
30004309	HLPSV05D543A	3×380-480V 50/60Hz	5.5	12	5.5
30004310	HLPSV07D543A	3×380-480V 50/60Hz	7.5	15.5	7.5
30004311	HLPSV001143A	3×380-480V 50/60Hz	11	23.0	11
30004312	HLPSV001543A	3×380-480V 50/60Hz	15	31.0	15
30004313	HLPSV18D543A	3×380-480V 50/60Hz	18.5	37.0	18.5
30004314	HLPSV002243A	3×380-480V 50/60Hz	22	43.0	22

Note: HLP-SV converter have SLC (Smart Logic Controller) function as optional, it need order on Demand.

Note: When ordering, please confirm ordering number, model and specifications carefully.

Note: The LCP of HLP-SV converter is option. It has to been separately ordered when needed.

Mechanical dimensions

Model	A	B	C	D	E	F/G	Mechanical dimensions (Unit: mm)
HLPSV0D1821A	55	70	141	150	148	Φ4.5	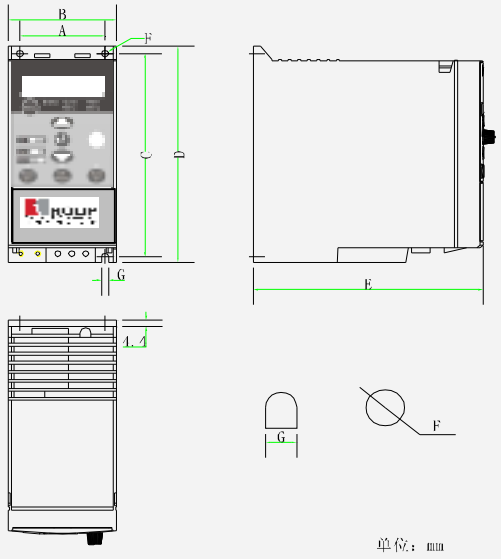
HLPSV00D421A							
HLPSV0D7521A							
HLPSV01D521A	59	75	167	176	168	Φ4.5	
HLPSV02D221A	69	90	226	239	194	Φ5.5	
HLPSV0D2523A	55	70	141	150	148	Φ4.5	
HLPSV00D423A							
HLPSV0D7523A							
HLPSV01D523A	59	75	167	176	168	Φ4.5	
HLPSV02D223A	69	90	226	239	194	Φ5.5	
HLPSV03D723A							
HLPSV00D443A	55	70	141	150	148	Φ4.5	
HLPSV0D7543A							
HLPSV01D543A	59	75	167	176	168	Φ4.5	
HLPSV02D243A							
HLPSV03D043A	69	90	226	239	194	Φ5.5	
HLPSV04D043A							
HLPSV05D543A							
HLPSV07D543A							
HLPSV001143A	97	125	273	292	241	Φ7	
HLPSV001543A							
HLPSV18D543A	140	165	315	335	248	Φ7	
HLPSV002243A							

Note: If the converter is equipped with the LCP with potentiometer, the value of "E" will be added 7.6mm.

Dimensions of LCP

HLP-SV converter can be equipped with two kinds of LCP: with potentiometer and without potentiometer. The LCP without potentiometer has Up、Down function directly by pressing navigation keys, and the LCP with potentiometer can set frequency reference through the potentiometer.

Ordering number	Name	Mechanical dimensions (Unit: mm)
300B0101	LCP with potentiometer	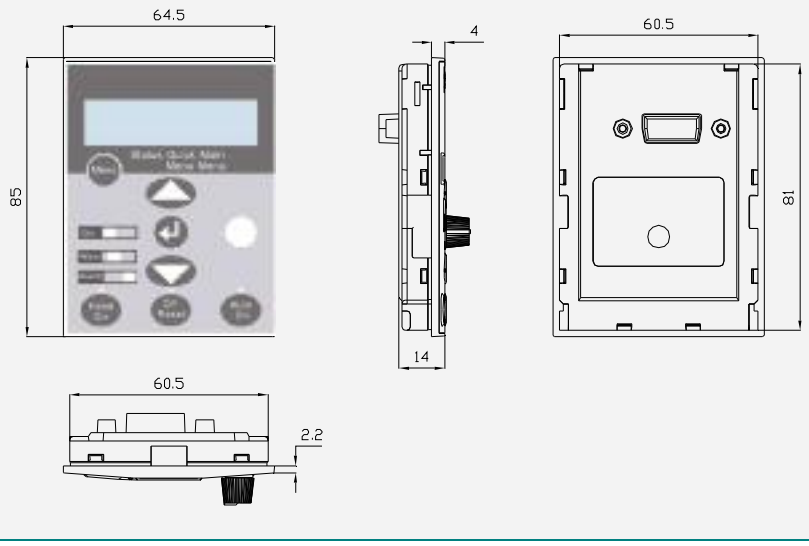
300B0100	LCP without potentiometer	

Note: The mechanical dimensions of LCP with and without potentiometer are the same.

Accessories

A dedicated mounting kit is available for mounting the local control panel in the cabinet. User can select length of the cable according to the following form. Also, user can select mounting kit or just only the cable.which is used for remote communication between LCP and the converter.

Ordering number (mounting kit)	Cable Length	Ordering number (Only cable)	Cable Length
300B0102	3m	132B4037	3m
300B0103	1m	132B4055	1m
300B0104	2m	132B4056	2m
300B0105	5m	132B4057	5m

Note: The mounting kit contains a, a metal plate, three screws for fixing metal plate, and four screws.

HLP-NV Series Vector Frequency Converter

HLP-NV series converter has unique VVC$^+$ vector control system for torque and speed control of induction motors. It is specially developed for low-power motor and designed book-size, dust-proof, and good cooling capacity. The converter can be installed side by side and really save space. It has PI controller, automatic motor turning function, and mechanical brake function.

Power range: 0.18~2.2kW (1×200-240V), 0.25~3.7kW (3×200-240V), 0.37~22kW (3×380-480 V)

Functions and Features

- It has excellent torque characteristic, and the response time of torque compensation is as short as 2ms;
- It has AMT (Automatic Motor Turning) function, which can exactly calculate motor internal parameters and keep motor in its best working condition;
- It has slip compensation function, which can compensate the deviation between actual velocity and reference, keeping the speed constant;
- It has torque compensation function at both high speed and low speed, which can ensure motor startup smoothly and run steadily;
- It is qualified to frequently DC brake for good DC brake function;
- It has flying start function, which can catch the velocity of motor quickly and drive motor to the reference;
- It can be startup by a pulse;
- Smart logic controller was built-in, making PLC omissible in most cases;
- A brake chopper is built in the converter from 1.5kW upwards, saving userís cost;
- It has five programmable digital inputs, and each of them has almost 30 functions to set;
- It has FC protocol and Modbus protocol, and it is easier for user to build up centralized control system.

Technical Data

Power Supply	Supply Frequency			48~62Hz
	Supply Voltage			3×380-480V±10% 1 & 3×200-240V ±10%
Output Data	Output Voltage			Three phases 0~100% Supply Voltage
	Output Frequency			0~200 Hz (**VVC**$^+$), 0~400 Hz (V/F)
	Overload capacity			150% Rated Current
	Ramp time			0.05~3600 s
Control Characteristics	Control site			LCP; Programmable Digital Inputs; Communication
	Reference source			LCP; Analog; Communication
Control Terminal	Programmable Digital Input	Number of Inputs		5, Terminal No.: RUN, F/R, RST, JOG, EMS
		Voltage Level		0-24VDC (PNP or NPN); Max. Input Voltage: 28VDC
		Logic Voltage Level		PNP:"0"<5VDC; "1">10VDC NPN "0">19VDC; "1" < 14VDC
		Input Resistance		4 kΩ
	Analog Input	Voltage	Number of Input	1, Terminal No.: VIN
			Voltage Level	0~10VDC; Max. Input Voltage20V
			Input Resistance	10 kΩ
		Current	Number of Inputs	2, Terminal No.: VIN, AIN
			Current Range	0~20 mA; Maximum input current: 30mA
			Input Resistance	200Ω
	Analog Output	Number of Output		1, Terminal No. AO
		Output Current Range		0/4-20mA
		Max. Load		500Ω
		Output Accuracy		0.5% of full range
		Resolution		8 bit
	24V DC Supply	Terminal No.		EV
		Max. Load		200mA (M1)
	RS485 Communication	Terminal No.		RS+ (TX+, RX+), RS- (TX-, RX-), COM (com)
		Communication Protocol		FC Protocol, Modbus Protocol
	Relay Output	Control card	Output Terminal	1, Terminal No.: FA-FB (Normal open), FA-FC (Normal close)
			Maximum Load: Resistive Load	250V AC 2A
				30V DC 2A
			Maximum Load: Inductive Load	250V AC 0.2A
				24V DC 0.1A
	10V DC Supply	Terminal No.		+10V
		Output Voltage		10.5±0.5V
		Max. Load Current		25mA
Surrounding	Enclosure			IP20
	Ambient Temperature			-10℃~40℃, derating for high ambient temperature
	Humidity			5%-95% Relative Humidity (Non-dewfall)
	Vibration			Below 1.0g
	Max. altitude above sea level			1000m
				3000m (Derate for altitude over 1000m above sea level)
Protections	Electronic motor thermal protection against overload			
	Overtemperature protection: Temperature monitoring of heat-sink ensures that the converter will trip when the temperature reaches 95±5℃, and an overtemperature can only reset when the temperature of heat-sink has fallen below 70±5℃.			
	The converter is protected against short-circuiting on the output terminals U, V,W.			
	The converter is protected against earth fault on output terminals U, V, W.			
	The converter will trip if the intermediate circuit voltage gets too high or too low.			
	If a motor phase is missing, the converter will trip and issue an alarm.			
	If there is a main fault, the converter will carry out a controlled ramp-down and issue an alarm.			
	If a main phase is missing, the converter will trip and issue an alarm.			

Wiring Diagram

The wiring of the converter is divided into two parts: main circuit and control circuit. The following drawing is factory standard wiring diagram of HLP-NV. The terminals should be connected correctly as the wiring diagram. (See user manual for details).

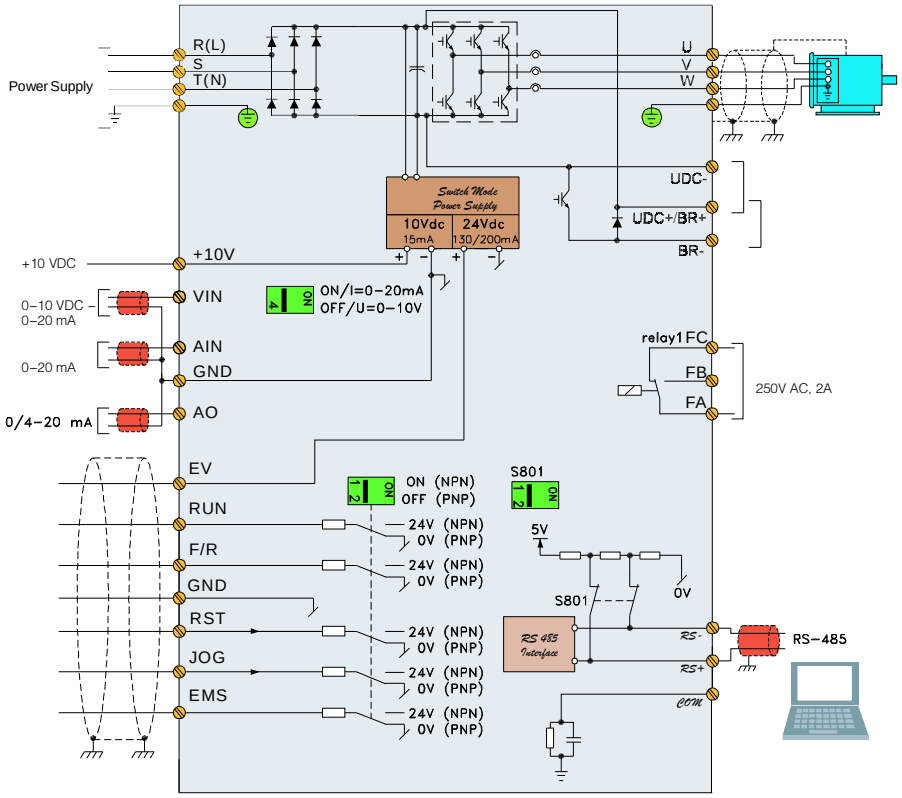

Symbol	Description	
R (L), S, T (N)	Power Supply terminals (Connect to L and N for single phase)	
U, V, W	Output terminals	
+UDC, BR	Braking Resistor terminals (1.5kW and above)	
-UDC	DC bus Negative terminal	
⏚	Ground Terminal	
GND	Common Terminal for Digital signal	
+10V	+10V DC Supply	
VIN	Analog Input (0-10V)	
GND	Common terminal for analog inputs	
AIN	Programmable Analog Input (0-20mA)	
AO	Programmable Analog Output (0/4-20mA)	
RS+, RS-, COM	Communication terminals	
EV	24V DC Supply	
Symbol	**Description**	**Factory setting**
RUN	Programmable Digital Input	Startup
F/R	Programmable Digital Input	Reverse
RST	Programmable Digital Input	Reset
JOG	Programmable Digital Input	Jog
EMS	Programmable Digital/Pulse Input	No Function
FA, FB, FC	Programmable Relay Outputs	Fault

Note: A brake chopper is built in the converter from 1.5kW upwards.

Electrical Data

Ordering number	Model	Mains supply	Power (kW)	Output Current (A)	Motor (kW)	Ordering number (Without LCP)
30012100	HLPNV0D1821A	1×200-240V 50/60Hz	0.18	1.2	0.18	30012150
30012102	HLPNV0D3721A	1×200-240V 50/60Hz	0.37	2.2	0.37	30012152
30012103	HLPNV0D7521A	1×200-240V 50/60Hz	0.75	4.2	0.75	30012153
30012104	HLPNV01D521A	1×200-240V 50/60Hz	1.5	6.8	1.5	30012154
30012105	HLPNV02D221A	1×200-240V 50/60Hz	2.2	9.6	2.2	30012155
30012301	HLPNV0D2523A	3×200-240V 50/60Hz	0.25	1.5	0.25	30012351
30012302	HLPNV0D3723A	3×200-240V 50/60Hz	0.37	2.2	0.37	30012352
30012303	HLPNV0D7523A	3×200-240V 50/60Hz	0.75	4.2	0.75	30012353
30012304	HLPNV01D523A	3×200-240V 50/60Hz	1.5	6.8	1.5	30012354
30012305	HLPNV02D223A	3×200-240V 50/60Hz	2.2	9.6	2.2	30012355
30012307	HLPNV03D723A	3×200-240V 50/60Hz	3.7	15.2	3.7	30012357
30014302	HLPNV0D3743A	3×380-480V 50/60Hz	0.37	1.2	0.37	30014352
30014303	HLPNV0D7543A	3×380-480V 50/60Hz	0.75	2.2	0.75	30014353
30014304	HLPNV01D543A	3×380-480V 50/60Hz	1.5	3.7	1.5	30014354
30014305	HLPNV02D243A	3×380-480V 50/60Hz	2.2	5.3	2.2	30014355
30014306	HLPNV03D043A	3×380-480V 50/60Hz	3.0	7.2	3.0	30014356
30014308	HLPNV04D043A	3×380-480V 50/60Hz	4.0	9.0	4.0	30014358
30014309	HLPNV05D543A	3×380-480V 50/60Hz	5.5	12	5.5	30014359
30014310	HLPNV07D543A	3×380-480V 50/60Hz	7.5	15.5	7.5	30014360
30014311	HLPNV001143A	3×380-480V 50/60Hz	11	23.0	11	30014361
30014312	HLPNV001543A	3×380-480V 50/60Hz	15	31.0	15	30014362
30014313	HLPNV18D543A	3×380-480V 50/60Hz	18.5	37.0	18.5	30014363
30014314	HLPNV002243A	3×380-480V 50/60Hz	22	43.0	22	30014364

Note: User can order the converter with LCP or Without LCP as required.

Mechanical dimensions

Model	A	B	C	D	E	F/G	Mechanical dimensions (Unit: mm)
HLPNV0D1821A	56	70	151	160	150	Φ4.5	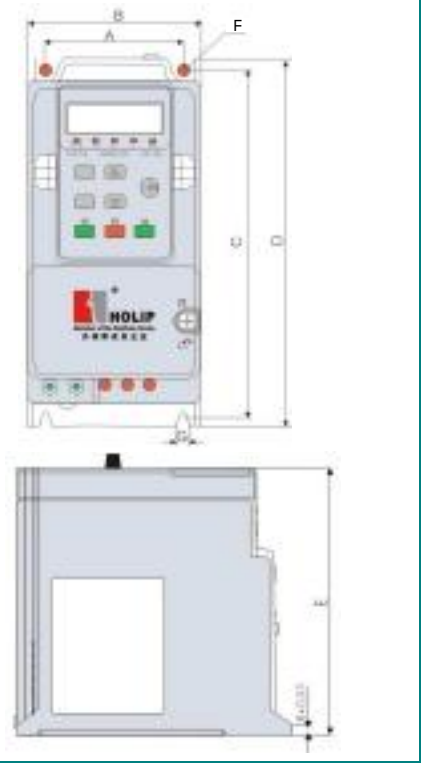
HLPNV0D2523A							
HLPNV0D3721A							
HLPNV0D3723A							
HLPNV0D3743A							
HLPNV0D7521A							
HLPNV0D7523A							
HLPNV0D7543A							
HLPNV01D521A	61	75	178	186	170	Φ4.5	
HLPNV01D523A							
HLPNV01D543A							
HLPNV02D243A							
HLPNV02D221A	76	90	230	239	196	Φ4.5	
HLPNV02D223A							
HLPNV03D043A							
HLPNV03D723A							
HLPNV04D043A							
HLPNV05D543A							
HLPNV07D543A							
HLPNV001143A	97	125	273	292	243	Φ7	
HLPNV001543A							
HLPNV18D543A	137	165	316	335	252	Φ7	
HLPNV002243A							

Dimensions of LCP

Name	Mechanical dimensions (Unit: mm)
LCP	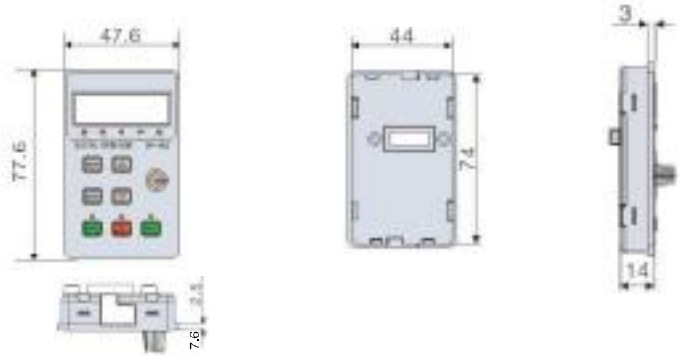

Note: HLP-NV series converter has two kinds of LCP: with potentiometer and without potentiometer. The LCP without potentiometer has Up、Down function directly by navigation keys.

Note: The mechanical dimensions of LCP with and without potentiometer are the same.

Accessories

A dedicated mounting kit is available for mounting the local control panel in the cabinet. User can select length of the cable according to the following form. Also, user can select mounting kit or just only the cable.which is used for remote communication between LCP and the converter.

Ordering number (kit)	The length of cable	Ordering number (only cable)	Length
300B0123	1m	300B4070	1m
300B0124	2m	300B4071	2m
300B0129	3m	300B4072	3m
300B0125	5m	300B4073	5m
300B0126	7m	300B4074	7m
300B0127	10m	300B4075	10m
300B0128	15m	300B4076	15m

Note: The mounting kit contains a, a metal plate, three screws for fixing metal plate, and four screws.

HLP-P Series Fan/Pump Dedicated Frequency Converter

HLP-P series converter is expressly developed for machines such as fan, pump and air compressor, based on the features of flow and pressure control principle. It can be used in closed-loop system dispense with PLC for its PID controller in most situations. It has functions of automatic voltage regulation, dormancy, automatic energy-saving, automatic stop when overpressure and restart when pressure gets normal, etc.

Specifically, it has an analog input and output expansion board from 15kW upwards, which is designed for three feedback signals from the pressure transmitter.

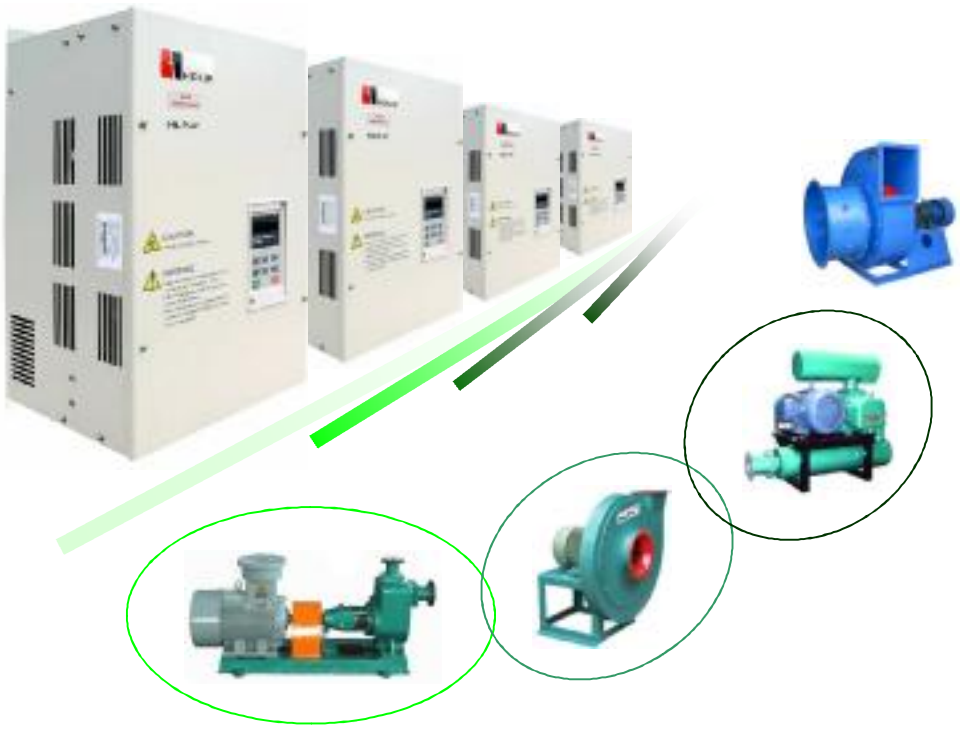

Power range: 0.75-5.5 kW (1 & 3×220V), 0.75-450 kW (3×380V)

Functions and Features

- It has a wider tolerance for the changes of supply voltage;
- It can be used one for two, that is one motor is supplied from converter and two motors are supplied from the main line;
- It has PID controller which can replace PLC in most closed-loop systems;
- It can receive three kinds of feedback signals: resistance 0-400Ω, current 4-20mA and voltage 0-10V;
- It has functions of Simple PLC, wobble, quasi winding and unwinding, multi-Speed control, etc;
- It provide full protections to ensure that pump has a much longer service life;
- The carrier frequency is user definable and can be as high as 20kHz;
- It has automatic energy-saving, automatic voltage regulation and dormancy functions
- It can automatically stop when the pressure is too high and restart when the pressure gets normal;
- It has Holip Communication Protocol and Modbus Protocol, and it is easier for user to build up centralized control system.

Technical Data

Modulation			SPWM
AC line supply			220V: 180~250V 380V: 380~460V
5 Digital Display & Status Indicator Lamp			Displaying frequency, current, revolution, voltage, counter, temperature, forward or reverse, fault, etc.
Communication Mode			RS 485 serial communication
Communication Protocol			Holip Communication Protocol, Modbus Protocol
Surroundings			Ambient Temperature: -10~40℃ Humidity: 0- 95% Relative Humidity (Non-dewfall) Vibration: Below 0.5g
Frequency Control	Output Frequency	Range	0.10~400.00Hz
		Accuracy	Digital: 0.01% (-10~40℃);Analog: 0.1% (25±10℃)
	Reference Resolution		Digital: 0.01Hz; Analog: 1‰ of Maximum Output Frequency
	Output Frequency Resolution		0.01Hz
	LCP Frequency Setting		By the buttons of ← ∧ ∨
	Analog Frequency Setting		External 0-5V, 0-10V, 4-20mA, 0-20mA
	Other functions		Frequency low limit, Start Frequency, Stop Frequency, Frequency bypass function (Three settable frequency bypasses)
General Control	Ramp time		0.1-6500sec (There are four selectable ramp up / down time)
	V/F Curve		It is possible to make a V/F curve on the basis of three definable voltage and frequencie.
	Torque Control		Maximum torque compensation can reach 10% Startup torque can reach 150% while 1Hz
	Programmable Digital Inputs		Six programmable digital inputs for 8-speed control mode, Simple PLC, ramp time switching, up and down function, counter, emergency stop, etc
	Programmable Digital Outputs		Five programmable digital outputs for indicating the status of running, below start frequency, counter, fault, the status of simple PLC and alarm.
	Other functions		Automatic Voltage Regulation, Ramp to stop or Coast, DC brake, Automatic reset and restart, Flying start, Simple PLC, Wobble function, Quasi winding and unwinding function, Automatic energy-saving, User-definable Carrier frequency (0.7-20kHz), etc.
Protections	Overload Protection		Electronic relay Protection for motor Frequency converter (Constant torque: 150%/1 min , Fan:120%/1 min)
	Fuse Protection		If fuse has blown, motor will stop
	Over voltage Protection		220V Class: DC Voltage >400V; 380V Class: DC Voltage >800V
	Under voltage Protection		220V Class: DC Voltage >200V; 380V Class: DC Voltage >400V
	Flying start after transient supply loss		Flying start after transient supply loss
	Anti-stall Function		Prevent stalling when running, accelerating or decelerating
	Output short circuit Protection		Electric circuit protection
	Other functions		Heat sink over-temperature protection, Restriction against reverse, Fault Reset, Parameter lock, One for two, etc.

Wiring Diagram and Terminal Description

The wiring of the converter is divided into two parts: main circuit and control circuit. The following drawing is the factory standard wiring diagram of HLPP001543B~HLPP003743B models. The terminals should be connected correctly as the wiring diagram. (See user manual for details).

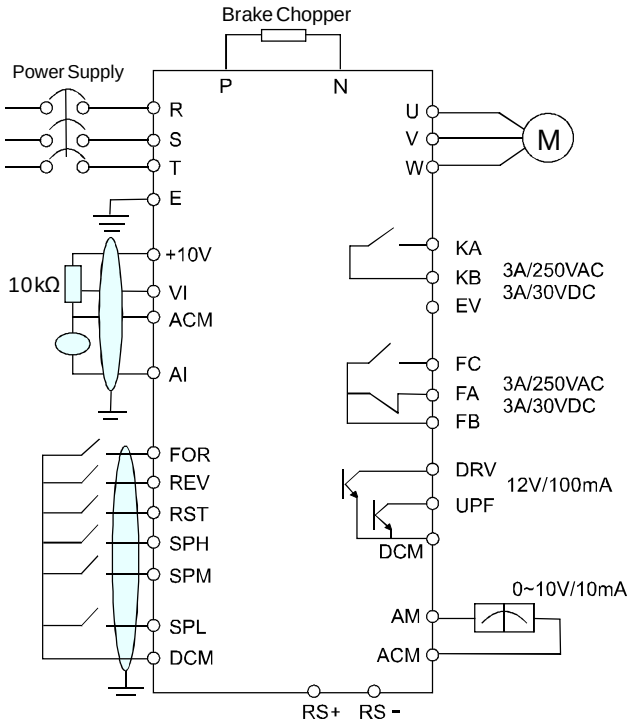

The wiring diagram of expansion board:

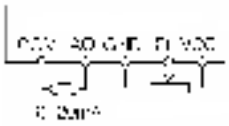

VCC, RI, GND: Three-wire feedback signal of pressure transmitter
RI, GND: 0-10V Analog voltage input
AO, COM: 0-20mA Analog Output

Symbol	Description
R, S, T	Power supply terminals (For single-phase, connect wires to any two terminals)
U, V, W	Output terminals
P, N	Braking chopper terminals
E	Ground terminal
DCM	Common terminal for digital inputs
+10V	10V DC supply
VI	Analog Voltage Input
AI	Analog Current Input
AM	Programmable Pulse/Current Analog Output
ACM	Common terminal for analog inputs
AO, COM	Analog Output (0-20mA)
VCC, RI, GND	Analog Input
RS+, RS-	RS 485 Serial Communication terminals

Symbol	Description	Factory Setting
FOR	Programmable Digital Input	Forward
REV	Programmable Digital Input	Reverse
RST	Programmable Digital Input	Reset
SPH	Programmable Digital Input	High speed
SPM	Programmable Digital Input	Medium speed
SPL	Programmable Digital Input	Low speed
DRV	Programmable Digital Output (Optical coupling)	Running
UPF	Programmable Digital Output (Optical coupling)	Reach Reference
FA, FB, FC	Programmable Digital Outputs (Normal close /Normal open)	Fault
KA, KB	Programmable Digital output (Normal open)	No function

Electrical Data

Ordering number	Model	Mains supply	Power (kW)	Output Current (A)	Motor (kW)	LCP Model
306100	HLPP0D7523C	1 & 3×220V 50Hz	0.75	5.0	0.75	OP-AC01
306101	HLPP01D523C	1 & 3×220V 50Hz	1.5	7.0	1.5	
306102	HLPP02D223C	1 & 3×220V 50Hz	2.2	11	2.2	
306103	HLPP03D723B	1 & 3×220V 50Hz	3.7	17	3.7	OP-AB01
306104	HLPP05D523B	1 & 3×220V 50Hz	5.5	25	5.5	OP-AB02
306110	HLPP0D7543C	3×380V 50Hz	0.75	2.7	0.75	OP-AC01
306111	HLPP01D543C	3×380V 50Hz	1.5	4.0	1.5	
306112	HLPP02D243C	3×380V 50Hz	2.2	5.0	2.2	
306113	HLPP03D743C	3×380V 50Hz	3.7	8.5	3.7	
333327	HLPP05D543B	3×380V 50Hz	5.5	12.5	5.5	OP-AB02
333328	HLPP07D543B	3×380V 50Hz	7.5	17.5	7.5	
333329	HLPP001143B	3×380V 50Hz	11	24	11	
333320	HLPP001543B	3×380V 50Hz	15	33	15	
333321	HLPP18D543B	3×380V 50Hz	18.5	40	18.5	
333322	HLPP002243B	3×380V 50Hz	22	47	22	
333323	HLPP003043B	3×380V 50Hz	30	65	30	
333324	HLPP003743B	3×380V 50Hz	37	75	37	
333325	HLPP004543B	3×380V 50Hz	45	91	45	
333326	HLPP005543B	3×380V 50Hz	55	110	55	
333330	HLPP007543B	3×380V 50Hz	75	152	75	
333334	HLPP009043B	3×380V 50Hz	90	176	90	
333331	HLPP011043B	3×380V 50Hz	110	210	110	
333333	HLPP013243B	3×380V 50Hz	132	253	132	
333332	HLPP016043B	3×380V 50Hz	160	304	160	
333339	HLPP018543B	3×380V 50Hz	185	340	185	
333335	HLPP020043B	3×380V 50Hz	200	380	200	
333374	HLPP022043B	3×380V 50Hz	220	426	220	
333340	HLPP025043B	3×380V 50Hz	250	480	250	
333342	HLPP028043B	3×380V 50Hz	280	540	280	
333349	HLPP030043B	3×380V 50Hz	300	580	300	
333336	HLPP031543B	3×380V 50Hz	315	605	315	
333350	HLPP034543B	3×380V 50Hz	345	660	345	
333337	HLPP037543B	3×380V 50Hz	375	715	375	
333344	HLPP040043B	3×380V 50Hz	400	765	400	
333338	HLPP041543B	3×380V 50Hz	415	795	415	
333348	HLPP045043B	3×380V 50Hz	450	880	450	

Note: When ordering, please confirm ordering number, model and specifications carefully.
Note: The converters are built in an analog input and output expansion board from 15kW upwards.

Mechanical dimensions

Model	HLPP0D7523C ~ HLPP02D223C HLPP0D7543C ~ HLPP03D743C	HLPP03D723B ~ HLPP05D523B HLPP05D543B
Shape	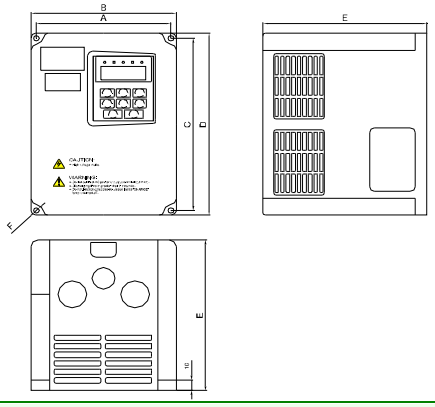	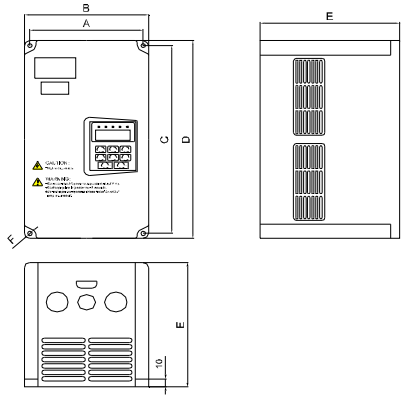
Model	HLPP07D543B ~ HLPP001143B	HLPP001543B ~ HLPP007543B
Shape	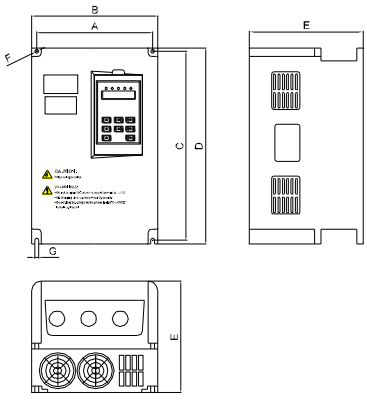	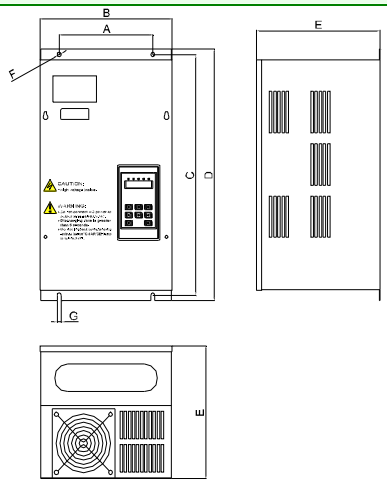
Model	HLPP009043B ~ HLPP018543B	HLPP016043BG ~ HLPP018543BG HLPP020043B ~ HLPP045043B
Shape	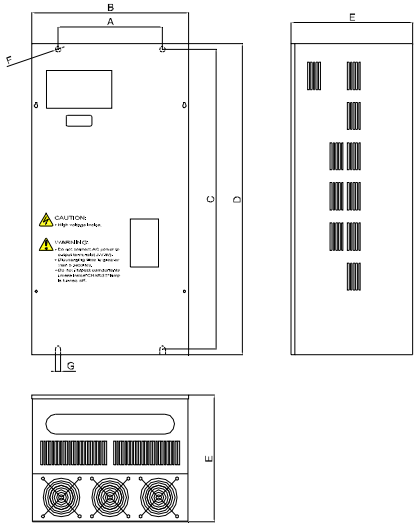	There are four lifting eyes on the top, and the height of them is : 36mm for 160～250 kW, 43mm for 280～450 kW

Dedicated Frequency Converter

Model	Mechanical dimensions (Unit: mm)							
	A	B	C	D	E	F	G	H
HLPP0D7523C	116	125	161	170	141	Φ5		
HLPP01D523C								
HLPP02D223C								
HLPP0D7543C								
HLPP01D543C								
HLPP02D243C								
HLPP03D743C								
HLPP03D723B	128	140	238	250	157	Φ5		
HLPP05D523B								
HLPP05D543B								
HLPP07D543B	184	200	306	318	180	Φ6	6	
HLPP001143B								
HLPP001543B	182	257	437	457	242	Φ8	8	
HLPP18D543B								
HLPP002243B	206	281	490	510	242	Φ8	8	
HLPP003043B	239	315	490	510	242	Φ8	8	
HLPP003743B								
HLPP004543B	250	345	650	670	325	Φ10	10	
HLPP005543B								
HLPP007543B	300	450	768	800	350	Φ16	16	
HLPP009043B								
HLPP011043B	300	450	828	860	350	Φ16	16	
HLPP013243B	500	650	868	900	400	Φ16	16	
HLPP016043B								
HLPP018543B	560	650	868	900	400	Φ16	16	
HLPP016043BG	600	600	1649	90	420	90	400	Φ16
HLPP018543BG								
HLPP020043B	600	600	1805	90	420	90	400	Φ16
HLPP022043B								
HLPP025043B								
HLPP028043B								
HLPP030043B	685	600	2225	90	505	90	400	Φ16
HLPP031543B								
HLPP034543B								
HLPP037543B	855	600	2279	90	675	90	400	Φ16
HLPP040043B								
HLPP041543B								
HLPP045043B								

Note: Please refer to HLP-A part for the dimensions and remote communication cable of LCP.

HLP-F Series Textile Dedicated Frequency Converter

HLP-F series frequency converter is dedicated to textile industry with two special functions: textile dedicated sixteen-speed control and sixteen-speed control with meter counter and shift function.

It is qualified for high-temperature, full of cotton applications. To the surrounding of the textile industry, the converter has two types of cooling for user to choose, one is with fan (B version) and the other heat-sink exposed (C version).

HLP-F series converter also has automatic voltage regulation and energy-saving functions.

Power range: 11-22 kW (3×380V)

Functions and Features

- It has high reliability with the motor control IC+IGBT at the core;
- It has a wider tolerance for the changes of supply voltage by 15%;
- It has special function for textile application, such as textile dedicated sixteen-speed, meter counter, and yarn breaking alarm, etc;
- It is fit for high temperature and full of cotton applications for its well designed in cooling;
- It has PID controller which is used in process control system;
- It has a function that the speed decreases Automatically in a user-defined time, this function can be used in some applications of winding ;
- It has a wide output frequency range 0.1-400.00 Hz and good frequency accuracy;
- It has Holip Communication Protocol and Modbus Protocol, and it is easier for user to build up centralized control system.

Technical Data

Modulation		SPWM
AC line supply		380V: 380±15%; 220V: 220±15%
5 Digital Display & Status Indicator Lamp		Displaying frequency, current, revolution, voltage, counter, temperature, forward or reverse, fault, etc
Communication Mode		RS 485 serial communication
Communication Protocol		Holip Communication Protocol Modbus Protocol
Temperature		-10~40℃
Humidity		0-95% Relative Humidity (Non-dewfall)
Vibration		Below 0.5g
Frequency Control	Output Frequency Range	0.10~400.00Hz
	Accuracy	Digital: 0.01% (-10~40℃) Analog: 0.1% (25±10℃)
	Reference Resolution	Digital: 0.01Hz Analog: 1‰ of Maximum Output Frequency
	Output Frequency Resolution	0.01Hz
	LCP Frequency Setting	By the buttons of ← ∧ ∨
	Analog Frequency Setting	External 0-5V, 0-10V, 4-20mA, 0-20mA
	Other functions	Frequency low limit, Start Frequency, Stop Frequency, Frequency bypass function (Three settable frequency bypasses)
General Control	Ramp time	0.1-6500sec (There are four selectable ramp up / down time)
	V/F Curve	It is possible to make a V/F curve on the basis of three definable voltage and frequencie.
	Torque Characteristic	Maximum torque compensation can reach 10% Startup torque can reach 150% while 1Hz
	Programmable Digital Input	Six programmable digital inputs for 8-speed control, Simple PLC, ramp time switching, up and down function, counter, emergency stop, etc
General Control	Programmable Digital Output	Five programmable digital outputs for indicating running, counter, fault, Simple PLC status and alarms
	Other functions	Automatic Voltage Regulation (AVR), Ramp to stop or Coast, DC brake, Automatic reset and restart, Flying start, Simple PLC, Wobble function, quasi winding and unwinding function, Automatic energy-saving, User-definable Carrier frequency (0.7-20kHz), etc.
Protections	Overload Protection	Electronic relay Protection for motor Frequency converter (Constant torque: 150%/1 min , Fan: 120%/1 min)
	Fuse Protection	If fuse has blown, motor will stop.
	Over voltage Protection	220V Class: DC Voltage ＞ 400V 380V Class: DC Voltage ＞ 800V
	Under voltage Protection	220V Class: DC Voltage ＜ 200V 380V Class: DC Voltage ＜ 400V
	Flying start after transient supply loss	Flying start after transient supply loss
	Anti-stall Function	Prevent stalling when running, accelerating or decelerating
	Output short circuit Protection	Electric circuit protection
	Other functions	Heat sink over-temperature protection, Restriction against reverse, Fault Reset, Parameter lock, One for two, etc.

Wiring Diagram and Terminal Description

The wiring of the converter is divided into two parts: main circuit and control circuit. The following drawing is the factory standard wiring diagram of HLPF001143B~HLPF002243B. The terminals should be connected correctly as the wiring diagram. (See user manual for details).

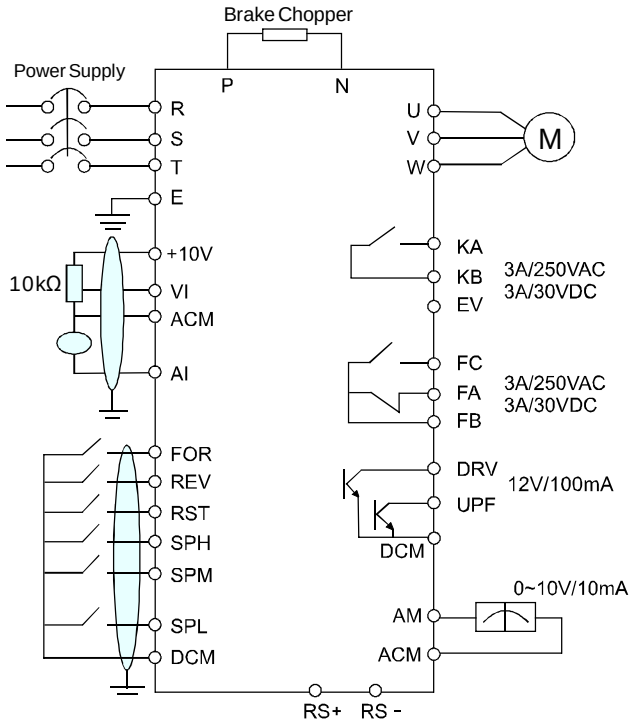

Symbol	Description	
R, S, T	Power supply terminals (For single-phase, connect wires to any two terminals)	
U, V, W	Output terminals	
P (+), N (-)	Braking chopper terminals	
E	Ground terminal	
DCM	Common terminal for digital inputs	
+10V	10V DC supply	
VI	Analog Voltage Input	
AI	Analog Current Input	
AM	Programmable Pulse/Current Analog Output	
ACM	Common terminal for analog inputs	
RS+, RS-	RS 485 Serial Communication Terminals	
Symbol	**Description**	**Factory Setting**
FOR	Programmable Digital Input	Forward
REV	Programmable Digital Input	Reverse
RST	Programmable Digital Input	Reset
SPH	Programmable Digital Input	High speed
SPM	Programmable Digital Input	Medium speed
SPL	Programmable Digital Input	Low speed
DRV	Programmable Digital Output (Optical coupling)	Running
UPF	Programmable Digital Output (Optical coupling)	Reach Reference
FA, FB, FC	Programmable Digital Outputs (Normal close /Normal open)	Fault
KA, KB	Programmable Digital output (Normal open)	No function

Electrical Data

Ordering number	Model	Mains supply	Power (kW)	Output Current (A)	Motor (kW)	LCP Model
304000	HLPF001143B	3×380V 50Hz	11	24	11	OP-AB02
304001	HLPF001543B		15	33	15	
304002	HLPF18D543B		18.5	40	18.5	
304003	HLPF002243B		22	47	22	
304101	HLPF001143C	3×380V 50Hz	11	24	11	
304100	HLPF001543C		15	33	15	
304102	HLPF18D543C		18.5	40	18.5	
304103	HLPF002243C		22	47	22	

Mechanical dimensions

Model	Mechanical dimensions (Unit: mm)
HLPF001143B	Same with HLPA001143B
HLPF001543B	
HLPF18D543B	Same with HLPA18D543B
HLPF002243B	
HLPF001143C	Same with HLPA001143B except "E" is longer by 6mm
HLPF001543C	
HLPF18D543C	Same with HLPA18D543B except "E" is longer by 6mm
HLPF002243C	

Note: B version of HLP-F has two fans internally, and C version of HLP-F has no fan internally.

Note: When ordering, please confirm ordering number, model and specifications carefully.

Note: Please refer to HLP-A part for the dimensions of HLP-F converter and its LCP, remote communication cable.

HLP-M Series Machine Tool Dedicated Frequency Converter

HLP-M series converter is dedicated to machine tools applications which need high startup torque. Its software makes the converter having much better performance while low frequency. To the surrounding of industry field, it has special treatment for protection against dust and damp.

HLP-M series converter has self-learning function which can automatic calculate motor data while motor is running at a certain frequency and make the converter match to motor well.

Power range: 0.4-3.7kW (1 & 3×220V), 0.75-7.5 kW (3×380V)

Functions and Features

- It has high reliability with the motor control IC+IGBT at the core;
- It has a wider tolerance for the changes of supply voltage by 15%;
- It is suited to dusty and damp applications for its design of protection against dust and damp;
- It has good torque characteristic, and output torque can reach 150% nominal torque while 1Hz;
- It has self-learning function which make it match motor well;
- It has a wide output frequency range and good frequency accuracy, and its resolution can reach 0.01Hz;
- It has PID controller which is used in closed-loop control system;
- It has Holip Communication Protocol and Modbus Protocol, and it is easier for user to build up centralized control system.

Technical Data

Modulation		SPWM
AC line supply		380V: 380±15%; 220V: 220±15%
5 Digital Display & Status Indicator Lamp		Displaying frequency, current, revolution, voltage, counter, temperature, forward or reverse, fault, etc.
Communication Mode		RS 485 serial communication
Communication Protocol		Holip Communication Protocol Modbus Protocol
Surroundings		Ambient Temperature: -10~40℃ Humidity: 0-95% Relative Humidity (Non-dewfall) Vibration: Below 0.5g
Frequency Control	Output Frequency Range	0.10~400.00Hz
	Accuracy	Digital: 0.01% (-10~40℃) Analog: 0.1% (25±10℃)
	Reference Resolution	Digital: 0.01Hz Analog: 1‰ of Maximum Output Frequency
	Output Frequency Resolution	0.01Hz
	LCP Frequency Setting	By the buttons of ← ∧ ∨
	Analog Frequency Setting	External 0-5V, 0-10V, 4-20mA, 0-20mA
	Other functions	Frequency low limit, Start Frequency, Stop Frequency, Frequency bypass function (Three settable frequency bypasses)
General Control	Ramp time	0.1-6500sec (There are four selectable ramp up / down time)
	V/F Curve	It is possible to make a V/F curve on the basis of three definable voltage and frequencie.
	Torque Characteristic	Maximum torque compensation can reach 10% Startup torque can reach 150% while 1Hz
	Programmable Digital Input	Six programmable digital inputs for 8-speed control, Simple PLC, ramp time switching, up and down function, counter, emergency stop, etc
General Control	Programmable Digital Output	Five programmable digital outputs for indicating running, counter, fault, Simple PLC status and alarms
	Other functions	Automatic Voltage Regulation (AVR), Ramp to stop or Coast, DC brake, Automatic reset and restart, Flying start, Simple PLC, Wobble function, quasi winding and unwinding function, Automatic energy-saving, User-definable Carrier frequency (0.7-20kHz), etc.
Protections	Overload Protection	Electronic relay Protection for motor Frequency converter (Constant torque: 150%/1 min, Fan: 120%/1 min)
	Fuse Protection	If fuse has blown, motor will stop.
	Over voltage Protection	220V Class: DC Voltage ＞ 400V 380V Class: DC Voltage ＞ 800V
	Under voltage Protection	220V Class: DC Voltage ＜ 200V 380V Class: DC Voltage ＜ 400V
	Flying start after transient supply loss	Flying start after transient supply loss
	Anti-stall Function	Prevent stalling when running, accelerating or decelerating
	Output short circuit Protection	Electric circuit protection
	Other functions	Heat sink over-temperature protection, Restriction against reverse, Fault Reset, Parameter lock, One for two, etc.

Wiring Diagram and Terminal Description

The wiring of the converter is divided into two parts: main circuit and control circuit. The following drawing is the factory standard wiring diagram of HLPM05D543B~HLPM07D543B models. The terminals should be connected correctly as the wiring diagram. (See user manual for details).

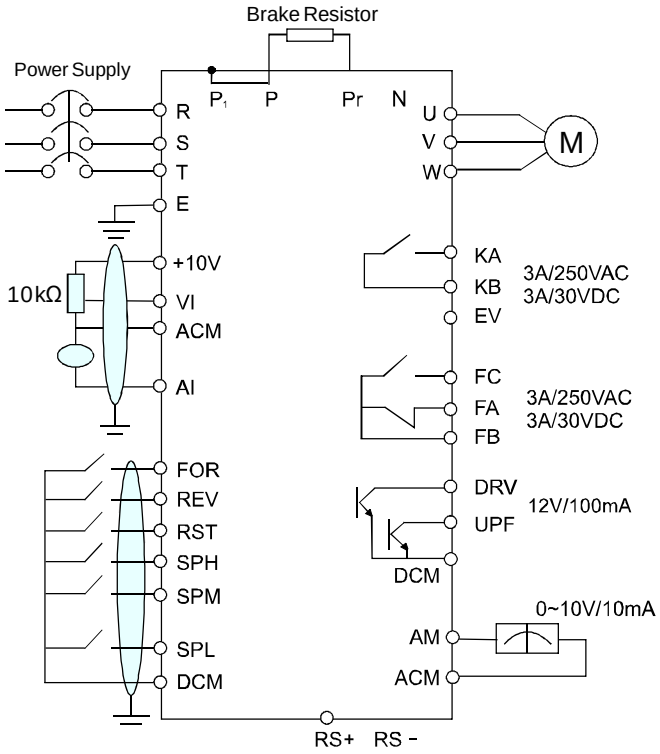

Note: P1, P are shorted internally.

Symbol	Description	
R, S, T	Power supply terminals (For single-phase, connect wires to any two terminals)	
U, V, W	Output terminals	
P, Pr	Braking Resistor terminals	
E	Ground terminal	
+10V	10V DC supply	
VI	Voltage input terminal	
AI	Current input terminal	
AM	Programmable Pulse/Current Analog Output	
ACM	Common terminal for analog inputs	
DCM	Common terminal for digital inputs	
RS+, RS-	RS 485 Serial Communication Terminals	
Symbol	**Description**	**Factory Setting**
FOR	Programmable Digital Input	Forward
REV	Programmable Digital Input	Reverse
RST	Programmable Digital Input	Reset
SPH	Programmable Digital Input	High speed
SPM	Programmable Digital Input	Medium speed
SPL	Programmable Digital Input	Low speed
DRV	Programmable Digital Output (Optical coupling)	Running
UPF	Programmable Digital Output (Optical coupling)	Reach Reference
FA, FB, FC	Programmable Digital Outputs (Normal close /Normal open)	Fault
KA, KB	Programmable Digital output (Normal open)	No function

Electrical Data

Ordering number	Model	Mains supply	Power (kW)	Output Current (A)	Motor (kW)	LCP Model
333041	HLPM00D423C	1 & 3× 220V 50Hz	0.4	2.5	0.4	OP-AC01
333042	HLPM0D7523C	1 & 3× 220V 50Hz	0.75	5.0	0.75	
333043	HLPM01D523C	1 & 3× 220V 50Hz	1.5	7.0	1.5	
333046	HLPM02D223B	1 & 3× 220V 50Hz	2.2	11	2.2	OP-AB01
333045	HLPM03D723B	1 & 3× 220V 50Hz	3.7	17	3.7	
333056	HLPM0D7543C	3×380V 50Hz	0.75	2.7	0.75	OP-AC01
333051	HLPM01D543C	3×380V 50Hz	1.5	4.0	1.5	
333053	HLPM02D243C	3×380V 50Hz	2.2	5.0	2.2	
333052	HLPM03D743B	3×380V 50Hz	3.7	8.5	3.7	OP-AB01
333054	HLPM05D543B	3×380V 50Hz	5.5	12.5	5.5	OP-AB02
333055	HLPM07D543B	3×380V 50Hz	7.5	17.5	7.5	

Mechanical dimensions

Model	Mechanical dimensions (Unit: mm)
HLPM00D423C	The same with HLPA00D423C
HLPM0D7523C	
HLPM01D523C	
HLPM02D223B	The same with HLPA02D223B
HLPM03D723B	
HLPM0D7543C	The same with HLPA0D7543C
HLPM01D543C	
HLPM02D243C	
HLPM03D743B	The same with HLPA03D743B
HLPM05D543B	The same with HLPA05D543B
HLPM07D543B	

Note: Please refer to HLP-A part for the dimensions of HLP-M converter and its LCP, remote communication cable.

Note: When ordering, please confirm ordering number, model and specifications carefully.

HLP-J Series Injection Machine Dedicated Frequency Converter

HLP-J series converter is specially designed for injection machines. It is specially added two analog current inputs for the two control signals of pressure and flow from injection machine. It uses cabinet type case and has little electromagnetic interference to other equipments.

HLP-J series converter is designed cabinet style. There is a switch on the cabinet with which user can choose the injection machine supplied by the converter or the main line.

Furthermore, the converter has high startup torque, automatic voltage regulation and energy-saving functions.

Power range: 11-75 kW (3×380V)

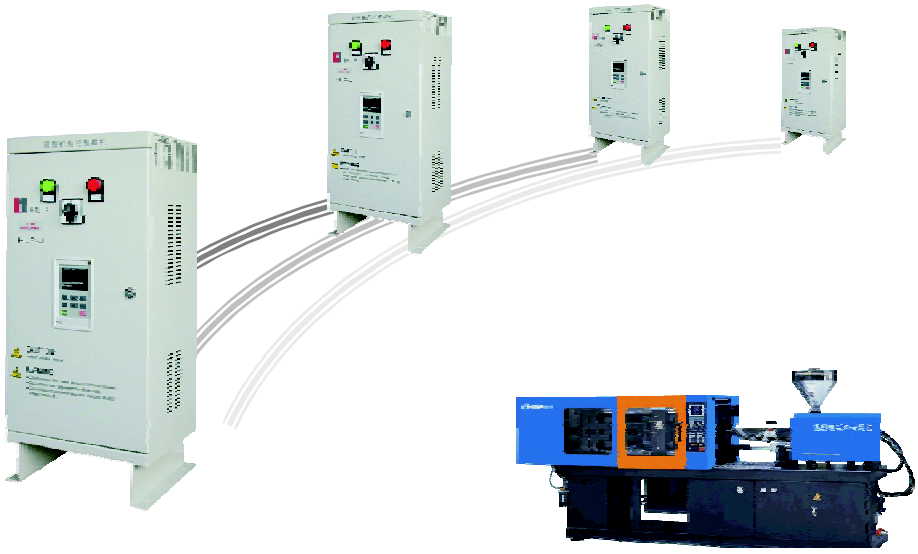

Functions and Features

- It has a wider tolerance for the changes of supply voltage by 15%;
- With the switch on the cabinet, user can choose the injection machine supplied by it or the main line;
- It is added two analog inputs specially for the two 0-1A current signals from injection machine;
- It uses cabinet type case and has little interference to environment because of the special treatment to EMI;
- It has good torque characteristic, and output torque can reach 150% nominal torque while 1Hz;
- It has good overload capacity which can reach 150% 1 min, and 180 % 0.2 sec;
- It has Holip Communication Protocol and Modbus Protocol, and it is easier for user to build up centralized control system.

Technical Data

Modulation		SPWM
AC line supply		3×380V: 340-460V
5 Digital Display & Status Indicator Lamp		Displaying frequency, current, revolution, voltage, counter, temperature, forward or reverse, fault, etc.
Communication Mode		RS 485 serial communication
Communication Protocol		Holip Communication Protocol Modbus Protocol
Output Data	Rated current	100%
	Maximum overload current	150% 1 min 180% 0.2 sec
Control and Operate	Frequency Control Range	0.10~400.00Hz
	Automatic Voltage Regulation	The output voltage can keep constant when the supply voltage changes, if AVR function is active.
	Frequency Accuracy	Digital: 0.01% (-10~40℃) Analog: 0.1% (25±10℃)
	Reference Resolution	Digital: 0.01Hz Analog: 1‰ of Maximum Output Frequency
	Output Frequency Resolution	0.01Hz
	Reference Source	LCP Analog 0~1A current input terminal Analog 0~10V input terminal Analog 4~20mA input terminal
	Breaking Torque	Below 22kW: >20% Above 30kW: >15%
	Ramp time	0.1-6500sec (There are four selectable ramp up / down time)
	V/F Curve	It is possible to make a V/F curve on the basis of three definable voltage and frequencie.
	Torque Characteristic	Maximum torque compensation can reach 10% Startup torque can reach 150% while 1Hz
	Programmable Digital Input	Six programmable digital inputs for Simple PLC and emergency stop, etc
	Programmable Digital Output	Five programmable digital outputs for indicating status of running, counter, fault, Simple PLC and alarm
	Protections	Overload Protection, Fuse Protection, Over voltage Protection, Under voltage Protection, Heat sink over-temperature Protection, Output short circuit Protection, Anti-stall Function, etc.

Wiring Diagram and Terminal Description

The wiring of the converter is divided into two parts: main circuit and control circuit. The following drawing is factory standard wiring diagram of HLP-J. The terminals should be connected correctly as the wiring diagram. (See user manual for details).

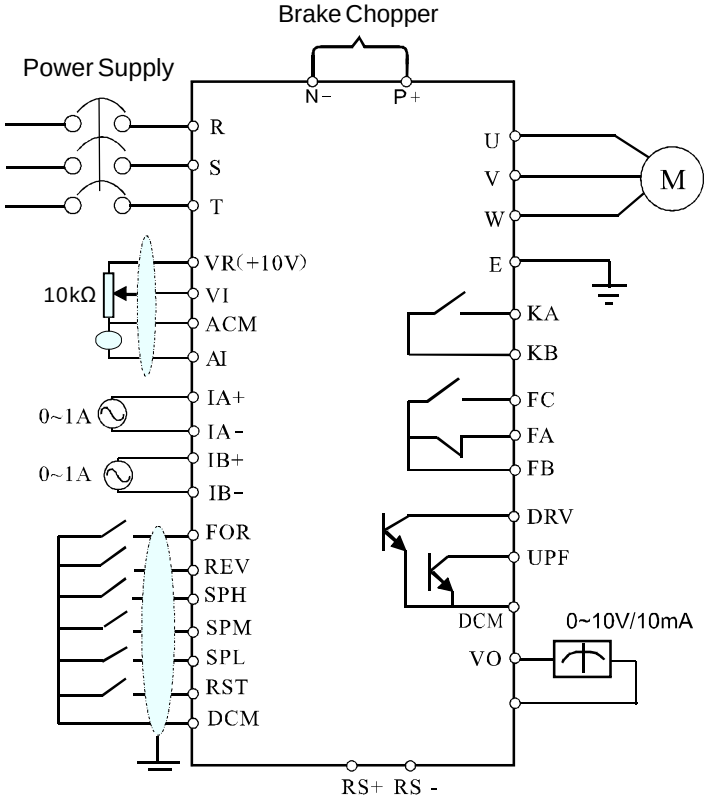

Symbol	Description
R, S, T	Power supply terminals (For single-phase, connect wires to any two terminals)
U, V, W	Output terminals
P+, N-	Braking chopper terminals
E	Ground terminal
DCM	Common terminal for digital inputs
VR (+10V)	10V DC supply
VI	Analog Voltage Input
AI	Analog Current Input
IA+, IA-	Analog Current Input (0-1A)
IB+, IB-	Analog Current Input (0-1A)
VO	Programmable Analog/Pulse Output 0-10V
ACM	Common terminal for analog inputs
RS+, RS-	RS 485 Serial Communication Terminals

Symbol	Description	Factory Setting
FOR	Programmable Digital Input	Forward
REV	Programmable Digital Input	Reverse
RST	Programmable Digital Input	Reset
SPH	Programmable Digital Input	High speed
SPM	Programmable Digital Input	Medium speed
SPL	Programmable Digital Input	Low speed
DRV	Programmable Digital Output (Optical coupling)	Running
UPF	Programmable Digital Output (Optical coupling)	Reach Reference
FA, FB, FC	Programmable Digital Outputs (Normal close /Normal open)	Fault
KA, KB	Programmable Digital output (Normal open)	No function

Electrical Data

Ordering number	Model	Mains supply	Power (kW)	Output Current (A)	Motor (kW)
333600	HLPJ001143B	3×380V 50Hz	11	24	11
333601	HLPJ001543B	3×380V 50Hz	15	33	15
333602	HLPJ18D543B	3×380V 50Hz	18.5	40	18.5
333603	HLPJ002243B	3×380V 50Hz	22	47	22
333607	HLPJ003043B	3×380V 50Hz	30	65	30
333608	HLPJ003743B	3×380V 50Hz	37	80	37
333610	HLPJ004543B	3×380V 50Hz	45	91	45
333609	HLPJ005543B	3×380V 50Hz	55	110	55
333611	HLPJ007543B	3×380V 50Hz	75	152	75

Mechanical dimensions

Model	A	B	C	D	E	Mechanical dimensions (Unit: mm)
HLPJ001143B	610	305	245	275	180	
HLPJ001543B						
HLPJ18D543B						
HLPJ002243B	770	290	300	260	250	
HLPJ003043B						
HLPJ003743B	980	345	350	315	300	
HLPJ004543B	1140	430	350	400	300	
HLPJ005543B						
HLPJ007543B	1140	520	350	490	300	

Note: Please refer to HLP-A part for the dimensions and remote communication cable of LCP.

Note: When ordering, please confirm ordering number, model and specifications carefully.

HLP-H Series Medium Frequency Converter

HLP-H series converter is dedicated to high-speed applications. It has much wider frequency range from 0.1Hz to 3000Hz and high frequency resolution 0.01Hz.

The converter is featured by smooth start, low noise, good cooling capacity and high stability, etc.

Power range: 0.4-7.5 kW (1 & 3×220V), 0.75-45kW (3×380V)

Functions and Features

- It has high reliability with the motor control IC+IGBT at the core;
- It is possible to make a V/F curve on the basis of three definable voltage and frequency.
- It has high control accuracy and good overload capacity which can reach 150% (1 min);
- It has a wider tolerance for the changes of supply voltage by 15%;
- It is qualified to a variety of applications for its PID controller;
- It has simple PLC functions such as wobble, multi-speed control and so on;
- It has good cooling capacity;
- It has Holip Communication Protocol and Modbus Protocol, and it is easier for user to build up centralized control system.

Technical Data

Modulation			SPWM
AC line supply			380V: 380±15%; 220V: 220±15%
5 Digital Display & Status Indicator Lamp			Displaying frequency, current, revolution, voltage, counter, temperature, forward or reverse, fault, etc
Communication Mode			RS 485 serial communication
Communication Protocol			Holip Communication Protocol Modbus Protocol
Surroundings			Ambient Temperature: -10~40℃ Humidity: 0-95%Relative Humidity (Non-dewfall) Vibration: Below 0.5g
Frequency Control	Output Frequency	Range	0.10~3000.00Hz
		Accuracy	Digital: 0.01% (-10~40℃) Analog: 0.1% (25±10℃)
	Reference Resolution		Digital: 0.01Hz Analog: 1‰ of Maximum Output Frequency
	Output Frequency Resolution		0.01Hz
	LCP Frequency Setting		By the buttons of ← ∧ ∨
	Analog Frequency Setting		External 0-5V, 0-10V, 4-20mA, 0-20mA
	Other functions		Frequency low limit, Start Frequency, Stop Frequency, Frequency bypass function (Three settable frequency bypasses)
General Control	Ramp time		0.1-6500sec (There are four selectable ramp up / down time)
	V/F Curve		It is possible to make a V/F curve on the basis of three definable voltage and frequencie.
	Torque Characteristic		Maximum torque compensation can reach 10% Startup torque can reach 150% while 1Hz
	Programmable Digital Inputs		Six programmable digital Inputs for 8-speed control, Simple PLC, ramp times switching, up and down function, counter, emergency stop, etc
	Programmable Digital Output		Five programmable digital outputs for indicating status of running, counter, fault, Simple PLC and alarms
	Other functions		Automatic Voltage Regulation, Ramp to stop or Coast, DC brake, Automatic reset and restart, Flying start, Simple PLC, Wobble function, quasi winding and unwinding function, Automatic energy-saving, User-definable Carrier frequency (0.7-20kHz), etc.
Protections	Overload Protection		Electronic relay Protection for motor, Frequency converter (Constant torque: 150% / 1 min , Fan: 120% / 1 min)
	Fuse Protection		If fuse has blown, motor will stop
	Over voltage Protection		220V Class: DC Voltage ＞ 400V 380V Class: DC Voltage ＞ 800V
	Under voltage Protection		220V Class: DC Voltage ＜ 200V 380V Class: DC Voltage ＜ 400V
	Flying start after transient supply loss		Flying start after transient supply loss
	Anti-stall Function		Prevent stalling when running, accelerating or decelerating
	Output short circuit Protection		Electric circuit protection
	Other functions		Heat sink over-temperature protection, Restriction against reverse, Fault Reset, Parameter lock, One for two, etc.

Wiring Diagram and Terminal Description

The wiring of the converter is divided into two parts: main circuit and control circuit. The following drawing is the factory standard wiring diagram of HLPH001143B~HLPH003043B models. The terminals should be connected correctly as the wiring diagram. (See user manual for details).

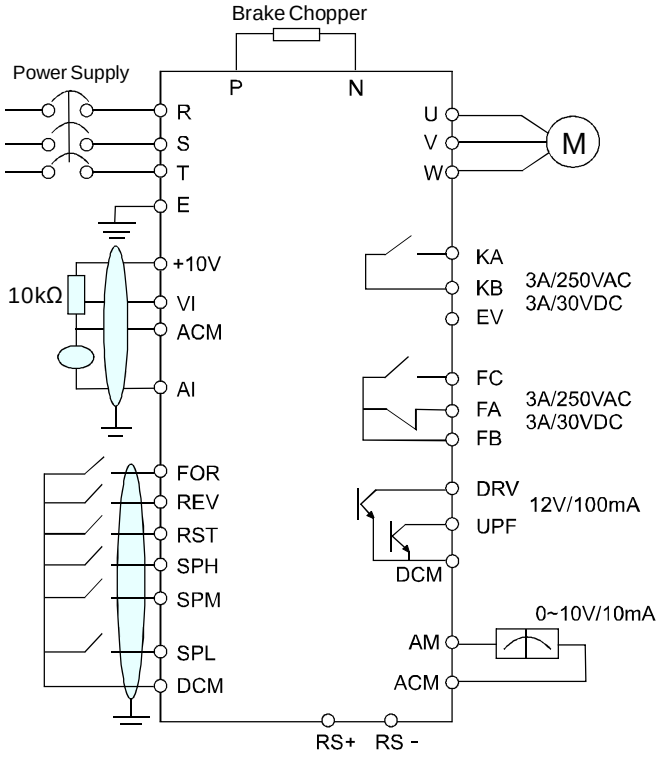

Symbol	Description	
R, S, T	Power supply terminals (For single-phase, connect wires to any two terminals)	
U, V, W	Output terminals	
P , N	Braking chopper terminals	
E	Ground terminal	
DCM	Common terminal for digital inputs	
+10V	10V DC supply	
VI	Voltage input terminal	
AI	Current input terminal	
AM	Programmable Pulse/Current Analog Output	
ACM	Common terminal for analog inputs	
RS+, RS-	RS 485 Serial Communication Terminals	
Symbol	**Description**	**Factory Setting**
FOR	Programmable Digital Input	Forward
REV	Programmable Digital Input	Reverse
RST	Programmable Digital Input	Reset
SPH	Programmable Digital Input	High speed
SPM	Programmable Digital Input	Medium speed
SPL	Programmable Digital Input	Low speed
DRV	Programmable Digital Output (Optical coupling)	Running
UPF	Programmable Digital Output (Optical coupling)	Reach Reference
FA, FB, FC	Programmable Digital Outputs (Normal close /Normal open)	Fault
KA, KB	Programmable Digital output (Normal open)	No function

Electrical Data

Ordering number	Model	Mains supply	Power (kW)	Output Current (A)	Motor (kW)	LCP Model
333220	HLPH00D423C	1 & 3×220V 50Hz	0.4	2.5	0.4	OP-AC01
333221	HLPH0D7523C		0.75	5.0	0.75	
333222	HLPH01D523C		1.5	7.0	1.5	
333234	HLPH02D223B	1 & 3×220V 50Hz	2.2	11	2.2	OP-AB01
333224	HLPH03D723B		3.7	17	3.7	
333236	HLPH05D523B		5.5	25	5.5	OP-AB02
333237	HLPH07D523B		7.5	33	7.5	
333230	HLPH0D7543C	3×380V 50Hz	0.75	2.7	0.75	OP-AC01
333231	HLPH01D543C		1.5	4.0	1.5	
333232	HLPH02D243C		2.2	5.0	2.2	
333233	HLPH03D743B	3×380V 50Hz	3.7	8.5	3.7	OP-AB01
333207	HLPH05D543B		5.5	12.5	5.5	OP-AB02
333247	HLPH07D543B		7.5	17.5	7.5	
333200	HLPH001143B		11	24	11	
333201	HLPH001543B		15	33	15	
333202	HLPH18D543B		18.5	40	18.5	
333203	HLPH002243B		22	47	22	
333204	HLPH003043B		30	65	30	
333205	HLPH003743B		37	80	37	
333206	HLPH004543B		45	91	45	

Mechanical dimensions

Model	Mechanical dimensions	Model	Mechanical dimensions
HLPH00D423C	The same with HLPA00D423C	HLPH03D743B	The same with HLPA03D743B
HLPH0D7523C		HLPH05D543B	The same with HLPA05D543B
HLPH01D523C		HLPH07D543B	
HLPH02D223B	The same with HLPA02D223B	HLPH001143B	The same with HLPA001143B
HLPH03D723B		HLPH001543B	
HLPH05D523B	The same with HLPA05D523B	HLPH18D543B	The same with HLPA18D543B
HLPH07D523B		HLPH002243B	
HLPH0D7543C	The same with HLPA0D7543C	HLPH003043B	The same with HLPA003043B
HLPH01D543C		HLPH003743B	The same with HLPA003743B
HLPH02D243C		HLPH004543B	

Note: Please refer to HLP-A part for the dimensions of HLP-H converter and its LCP, LCP remote communication cable.

Note: When ordering, please confirm ordering number, model and specifications carefully.

HLP-CP Series Treadmill and Knitter Dedicated Frequency Converter

HLP-CP series converter, which has small size, low noise, good anti-interference capacity and high startup torque, is specially designed for treadmill and knitter. The converter has PID controller and Simple PLC function.

Power range: B: 0.4-2.2kW (1 & 3×220V); BZ / BH: 0.4-1.5kW (1 & 3×220V)

HLP-CP Functions and Features

- It has high reliability with PIM at the core;
- It has good anti-interference capacity;
- It has PID controller and Simple PLC;
- It has high output torque which can reach 150% while 1 Hz;
- It has low noise, and its carrier frequency can be as high as 16kHz;
- It has Holip Communication Protocol and Modbus Protocol, and it is easier for user to build up centralized control system.

Technical Data

Modulation		SPWM
AC line supply		400V: 345-440V; 230V: 170-230V
Communication Mode		RS 485 serial communication
Communication Protocol		Holip Communication Protocol Modbus Protocol
4 Digital Display & Status Indicator Lamp		Displaying Frequency, current, torque, voltage, Counter, Temperature, pressure, forward or reverse, fault, etc.
Ambient Temperature		-10 ~ 40℃
Humidity		0 - 95% Relative Humidity (Non-dewfall)
Vibration		Below 0.5g
Frequency Control	Output Frequency Range	0.10 ~ 600.00Hz
	Accuracy	Digital: 0.01% (-10~40℃); Analog: 0.1% (25±10℃)
	Reference Resolution	Digital: 0.1Hz Analog: 1‰ of Maximum Output Frequency
	Output Frequency Resolution	0.1Hz
	LCP Frequency Setting	By buttons of △▽
	Analog Frequency Setting	External 0-5V, 0-10V, 4-20mA, 0-20mA
	Other functions	Frequency low limit, Start Frequency, Stop Frequency, Frequency bypass function (Three settable frequency bypasses), etc.
General Control	Ramp time	0.1-6500sec (There are four selectable ramp up / down time)
	V/F Curve	It is possible to make a V/F curve on the basis of three definable voltage and frequencie.
	Torque Characteristic	Maximum torque compensation can reach 10% Startup torque can reach 150% while 1Hz
	Programmable Digital Input	Six programmable digital Inputs for 8-speed control, Simple PLC, ramp times switching, up and down function, counter, emergency stop, etc
	Programmable Digital Output	Two programmable digital output, indicating status of running, counter, fault, Simple PLC and Alarm
	Other functions	Automatic Voltage Regulation, Ramp to stop or Coast, DC brake, Automatic reset and restart, Flying start, Simple PLC, Wobble function, quasi winding and unwinding function, Automatic energy-saving, User-definable Carrier frequency (1.5-16kHz), etc.
Protections	Over voltage Protection	220V Class: DC Voltage ＞ 400V 380V Class: DC Voltage ＞ 800V
	Under voltage Protection	220V Class: DC Voltage ＜ 200V 380V Class: DC Voltage ＜ 400V
	Flying start after transient supply loss	Flying start after transient supply loss
	Anti-stall Function	Prevent stalling when running, accelerating or decelerating
	Output short circuit Protection	Electric circuit protection
	Other functions	Heat sink over-temperature protection, Restriction against reverse, Fault Reset, Parameter lock, etc.

Terminal Description

The wiring of the converter is divided into two parts: main circuit and control circuit. The following drawing is the factory standard wiring diagram of HLP-CP. The terminals should be connected correctly as the wiring diagram (See user manual for details).

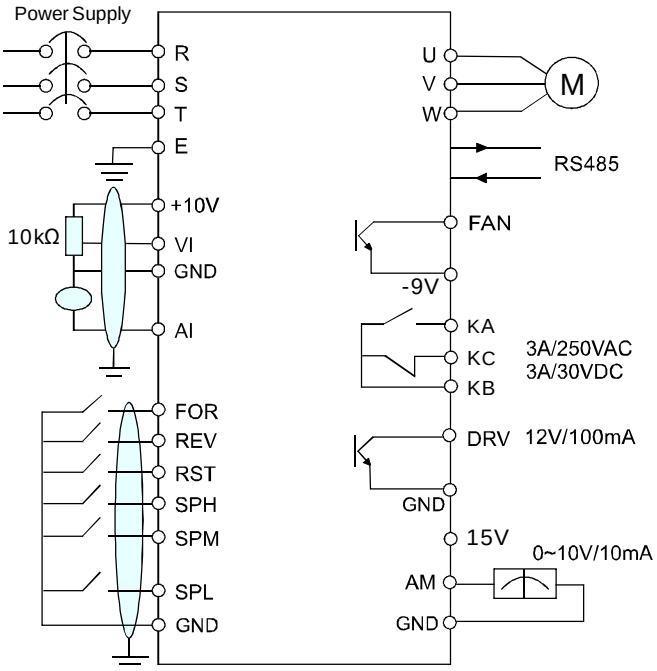

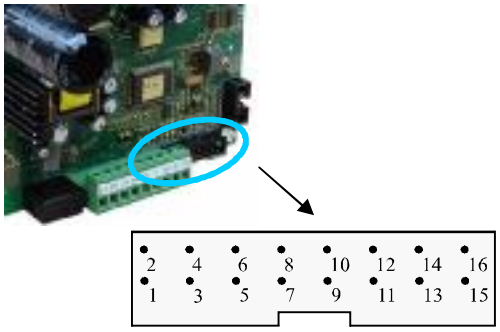

Number	Symbol	Number	Symbol
1	FOR	9	GND
2	REV	10	AM
3	RST	11	VI
4	SPH	12	AI
5	SPM	13	RS-
6	SPL	14	RS+
7	+10V	15	GND
8	DRV	16	+5V

Symbol	Description
R, S, T	Power supply terminals (For single-phase, connect wires to any two terminals)
U, V, W	Output terminals
E	Ground terminal
FAN	-9V supply of fan
+15V	15V power supply for external device
+10V	10V DC supply
VI	Voltage input terminal
AI	Current input terminal
AM	Programmable Pulse/Current Analog Output
GND	Common terminal for analog inputs
+5V	5V power supply

Symbol	Description	Factory Setting
FOR	Programmable Digital Input	Forward
REV	Programmable Digital Input	Reverse
RST	Programmable Digital Input	Reset
SPH	Programmable Digital Input	High speed
SPM	Programmable Digital Input	Medium speed
SPL	Programmable Digital Input	Low speed
DRV	Programmable Digital Output (Optical coupling)	Running
KA, KB	Programmable Digital Outputs (Normal open)	Fault
KB, KC	Programmable Digital Outputs (Normal closed)	Fault

Electrical Data

Ordering number	Model	Mains supply	Power (kW)	Output Current (A)	Motor (kW)
333100	HLPCP00D423B	1 & 3×220V 50/60Hz	0.4	2.5	0.4
333101	HLPCP0D7523B	1 & 3×220V 50/60Hz	0.75	5.0	0.75
333102	HLPCP01D523B	1 & 3×220V 50/60Hz	1.5	7.0	1.5
333103	HLPCP02D223B	1 & 3×220V 50/60Hz	2.2	10	2.2
333160	HLPCP00D423BZ	1 & 3×220V 50/60Hz	0.4	2.5	0.4
333161	HLPCP0D7523BZ	1 & 3×220V 50/60Hz	0.75	5.0	0.75
333162	HLPCP01D523BZ	1 & 3×220V 50/60Hz	1.5	7.0	1.5
333163	HLPCP00D423BH	1 & 3×220V 50/60Hz	0.4	2.5	0.4
333164	HLPCP0D7523BH	1 & 3×220V 50/60Hz	0.75	5.0	0.75
333165	HLPCP01D523BH	1 & 3×220V 50/60Hz	1.5	7.0	1.5

Note: When ordering, please confirm ordering number, model and specifications carefully.

Note: Standard HLP-CP attaches a LCP whose model is OP-CB04.

Note: Please refer to HLP- C^+ part for the dimensions of LCP and remote communication cable.

Mechanical dimensions

Model	A	B	C	D	E	F	G	H	Mechanical dimensions (Unit: mm)
HLPCP00D423B	111	125	186	200	110	Φ5	43	170	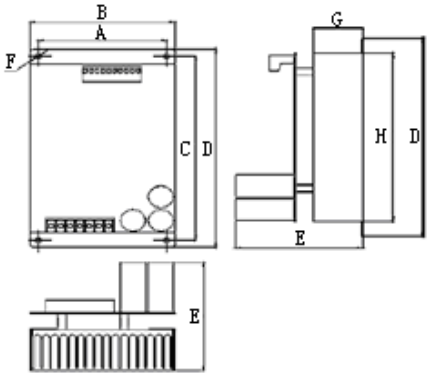
HLPCP0D7523B									
HLPCP01D523B									
HLPCP02D223B									
HLPCP00D423BZ/BH	111	125	186	200	107.5	Φ5	41	170	
HLPCP0D7523BZ/BH									
HLPCP01D523BZ/BH									
HLPCP00D423BZ/BH	111	125	186	200	107.5	Φ5	41	170	
HLPCP0D7523BZ/BH									
HLPCP01D523BZ/BH									

Note: The model which ends with B represents treadmill dedicated converter, and which ends with BZ/BH represents knitter dedicated converter.

General Optional Parts

DC reactor

DC reactor functions by limiting the AC component on it to certain stipulated value; suppressing grid harmonics and improving the power factor of frequency converter. Connecting method: Remove the P and P1 terminal jumper, and connect the DC reactor to them, as shown in the diagram on the right.

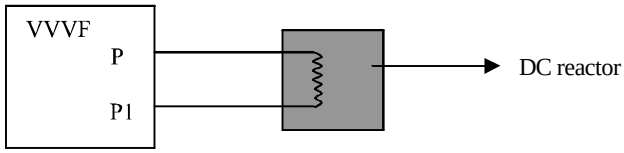

Note: Connecting point reserved on 37W HLP frequency converter; no connection is allowed for those below 37W.

Where the power capacity is greater than 1000kVA or the power grid's capacity is far larger than that of the frequency converter, or in case where there are higher requirements for improving power factors, it would be necessary to install a DC reactor. It will be used simultaneously with the AC reactor. It has a significant impact on the reduction of high-order harmonics.

The following table lists the DC reactor parts for HLP-V series frequency converter. If installation is required, a user can order from the distributor based on the part numbers and specifications.

Part No.	Power (kW)	Specifications	Part No.	Power (kW)	Specfications
112300 11	0033	EIDH	E2M0 112308	0180	UIDH
112300 15	0033	EIDH	E2M0 112310	0250	UIDH
112301 18.5	0040	EIDH	E1M3 112310	0250	UIDH
112302 22	0050	EIDH	E1M1 112311	0340	UIDH
112303 30	0065	EIDH	EM80 112312	0460	UIDH
112304 37	0078	EIDH	EM70 112313	0650	UIDH
112305 45	0095	EIDH	EM54 112314	0800	UIDH
112306 55	0115	EIDH	EM45 112314	0800	UIDH
112307 75	0160	UIDH	EM36 112315	1000	UIDH

For other Holip frequency converter series, please refer to the table's attendant DC reactor.

AC input/output reactor

DC reactor can suppress high-order harmonics of the frequency converter's input current and improve the input power factor of the frequency converter. It also prevents surge impact. The connecting method is as shown in the diagram on the right.

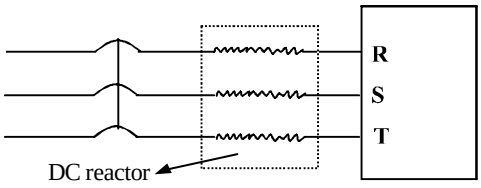

Output reactor's main function is to compensate the impact of long-line distributed capacitance. It can also suppress the output harmonic current; raise output high frequency impedance as well as effectively suppress dv/dt, thus reducing high frequency leakage current and protecting the frequency converter and lowering equipment noise.

Use of input Ac reactor is recommended in situations where the three-phase power sources is imbalanced or where the same power source is connected to thyristor device or in the case of power factor compensating device with switching controls.

The following table lists the AC input/output reactor parts for HLP-V series frequency converter. If installation is required, a user can order from the distributor based on the part numbers and specifications.

Power (kW)	External Input Reactor		External Input Reactor	
	Part No.	Specifications	Part No.	Specfications
11 112350	0030	EISH	EM60 112400 OCL	0030
15 112351	0040	EISH	EM42 112401 OCL	0040
18.5 112352	0050	EISH	EM35 112402 OCL	0050
22 112353	0060	EISH	EM28 112403 OCL	0060
30 112354	0080	EISC	EM19 112404 OCL	0080
37 112355	0090	EISC	EM19 112405 OCL	0090
45 112356	0120	EISH	EM13 112406 OCL	0120
55 112357	0150	EISH	EM11 112407 OCL	0150
75 112358	0200	EISH	EM08 112408 OCL	0200
90 112359	0250	EISH	E65U 112409 OCL	0250
110 112359	0250	EISH	E65U 112409 OCL	0250
132 112360	0290	EISH	E50U 112410 OCL	0290
160 112361	0330	EISH	E50U 112411 OCL	0330
200 112362	0490	EISH	E35U 112412 OCL	0490
250 112363	0530	EISH	E35U 112413 OCL	0530
315 112364	0660	EISH	E25U 112414 OCL	0660
355 112365	0800	EISH	E25U 112415 OCL	0800
400 112367	1000	EISH	E14U 112416 OCL	1000

For other Holip frequency converter series, please refer to the table or the Instruction Manual's attendant input/output DC reactor, or inquire with the distributor.

Input/output filter

Filters are used to reduce harmonic components, and suppress interference signals from frequency converter which interfere with the power source and engine through the power line. To reduce electromagnetic noise and loss, output filter may be installed on the output side of the frequency converter. To reduce interference with power source, input filter may be installed in the input side of the frequency converter.

The following table lists the AC input/output filter for HLP-V series frequency converter. If installation is required, a user can order from the distributor based on the part numbers and specifications.

Power (kW)	External input filter		External output filter		Power (kW)	External input filter		External output filter	
	Part No	Specifications	Part No	Specifications		Part No	Specifications	Part No	Specifications
11	110200	NFI-036	110250	NFO-036	90	110206	NFI-200	110256	NFO-200
15	110200	NFI-036	110250	NFO-036	110	110207	NFI-250	110257	NFO-250
18.5	110201	NFI-050	110251	NFO-050	132	110207	NFI-250	110257	NFO-250
22	110201	NFI-050	110251	NFO-050	160	110208	NFI-300	110258	NFO-300
30	110202	NFI-065	110252	NFO-065	200	110209	NFI-400	110259	NFO-400
37	110203	NFI-080	110253	NFO-080	250	110210	NFI-600	110260	NFO-600
45	110204	NFI-100	110254	NFO-100	315	110210	NFI-600	110260	NFO-600
55	110205	NFI-150	110255	NFO-150	355	110211	NFI-900	110261	NFO-900
75	110205	NFI-150	110255	NFO-150	400	110211	NFI-900	110261	NFO-900

For other Holip frequency converter series, please refer to the table or the Instruction Manual's attendant input/output filter, or inquire with the distributor.

Braking unit and braking resistor

The function of the braking unit and braking resistor is to consume the motor's regenerative power and reduce speed-reduction time. Please refer to the Instruction Manual for the configuration of braking unit and braking resistor.

HLP-A, HLP-M, HLP-H, HLP-F and HLP-J series of frequency converter with similar power factor is equipped with braking resistor of similar specification, the user may refer to the following table.

Frequency Converter kW	specifications for the braking resistor		Braking torque 10%ED	Dedicated Motor kW	Frequency Converter kW	specifications for the braking resistor		Braking torque 10%ED	Dedicated Motor kW
	W	Ω				W	Ω		
0.4	80	200	125	0.4	37	9600	16	125	37
0.75	100	200	125	0.75	45	9600	13.6	125	45
1.5	300	100	125	1.5	55	12000	20/2	125	55
2.2	300	70	125	2.2	75	18000	13.6/2	125	75
0.75	80	750	125	0.75	90	18000	20/3	125	90
1.5	300	400	125	1.5	110	18000	20/3	125	110
2.2	300	250	125	2.2	132	24000	20/4	125	132
3.7	400	150	125	3.7	160	36000	13.6/4	125	160
5.5	500	100	125	5.5	185	45000	13.6/5	125	185
7.5	1000	75	125	7.5	200	45000	13.6/5	125	200
11	1000	50	125	11	220	48000	13.6/5	125	220
15	1500	40	125	15	250	48000	13.6/5	125	250
18.5	4800	32	125	18.5	280	57600	13.6/6	125	280
22	4800	27.2	125	22	300	57600	13.6/6	125	300
30	6000	20	125	30	For machinery braking resistor of 315kW and above please contact the manufacturer				

Note: If frequency converter of 11kW and above were to achieve rapid braking, it would be necessary to install braking unit

! **Attention**

1. Please select the resistance value and usage frequency set by the company;
2. Our company shall not be liable for any damage to the frequency converter or other equipment where braking resistor and braking unit not supplied by our company were used;
3. Installation of braking resistor should take into consideration the safety; inflammability; the distance from frequency converter should be at least 100mm;
4. Please contact the local distributor if resistance value and power factor were to be changed;
5. Please contact the local distributor if individual orders for braking resistor or braking unit were required.

HLP-NV and HLP-SV series of frequency converter with similar power factor is equipped with braking resistor of similar specification, the user may refer to the following table.

Frequency Converter kW	Specifications for the braking resistor		Braking torque 10%ED	Dedicated Motor kW	Frequency Converter kW	Specifications for the braking resistor		Braking torque 10%ED	Dedicated Motor kW
	W	Ω				W	Ω		
1.5 (single-phase 220-240V)	300	75	125	1.5	2.2 (three-phase 380-480V)	300	250	125	2.2
1.5 (three-phase 220-240V)	300	100	125	1.5	3.0 (three-phase 380-480V)	400	150	125	3.0
1.5 (three-phase 380-480V)	300	400	125	1.5	3.7 (three-phase 220-240V)	400	50	125	3.7
2.2 (single-phase 220-240V)	300	50	125	1.5	4.0 (three-phase 380-480V)	500	100	125	4.0
2.2 (three-phase 220-240V)	300	70	125	1.5	5.5 (three-phase 380-480V)	500	75	125	5.5

Note: Please inquire with the manufacturer or distributor for specifications of braking resistor for frequency converter of other power rating, or refer to the calculation formula of HLP-V/VS braking resistor.

The calculation formula for HLP-V/VS series of frequency converter is as follows:

$$R_{REC} = \frac{U_{dc}{}^{2} * 100}{P_{motor} * M_{br(\%)} * \eta_{motor} * \eta_{HLP-V}}$$

Where: Udc is the turn-on voltage for braking (V); RREC is the resistance value of the braking resistor (Ω); Pmotor is the motor power rating (kW); ηmotor is the motor efficiency, which is usually 0.90; ηHLP-V is the frequency converter's efficiency, which is usually 0.98, and Mbr is the braking torque (%).

In order to ensure that the frequency converter can undertake braking at 160% of maximum braking torque (Mbr), RREC can be indicated as (unit: Ω):

Three-phase 200-240V: RREC = 97.009 / PMOTOR

Three-phase 380-440V: RREC =377.621 / PMOTOR

The maximum power for braking resistor is (Unit: W):

Three-phase 200-240V: P = 3702 *t/(RREC *120)

Three-phase 380-440V: P = 7302 *t/(RREC *120)

Where t is the braking time, unit is s.

Circuit breaker for connection and leakage switch

The frequency converter's wiring can be protected by installing relay on the power source side. Please refer to the Instruction Manual for the converter for setting of volume of air circuit breaker and cross section area of the wire.

As the inside of the converter; inside of the electric motor and the input and output write all have electrostatic capacitor to ground, the carrier frequency of the converter is relatively high, its leakage current to ground is therefore correspondingly large. This is more obvious in the case of large-capacity machines. Using leakage switch can sometimes lead to erroneous action for protective circuit. Therefore leakage switch should be equipped with high-order harmonics, with suitable reduction of carrier frequency, and shorten lead, etc.

Electromagnetic contactor and surge absorber

Set the electromagnetic contactor in order to prevent burnt braking resistor. When it is used in the wire circle the surge absorber should be attached. The surge absorber should be used to absorb electromagnetic contactor and surge current from the control relay switch.

Isolation transformer

Isolation transformer possesses the input and output function of isolation frequency converter, and has certain effect for lowering interference.

HOLIP
Member of the Danfoss Group
丹佛斯成员企业

ZHEJIANG HOLIP ELECTRONIC TECHNOLOGY CO., LTD.

Sales Department : +86 571 28891071
Service Hot Line: +86 400-809-5335
Fax: +86 571 28891072
E-mail: holipoverseas@danfoss.com
http://www.en.holip.com
Address: C1, 7 Floor, Donghai Chuangyi Centre, No.7 Tianmushan Road, Hangzhou, Zhejiang, China

2010-05